ENGINEERING & DIMENSIONS

RETRO ROLLS®

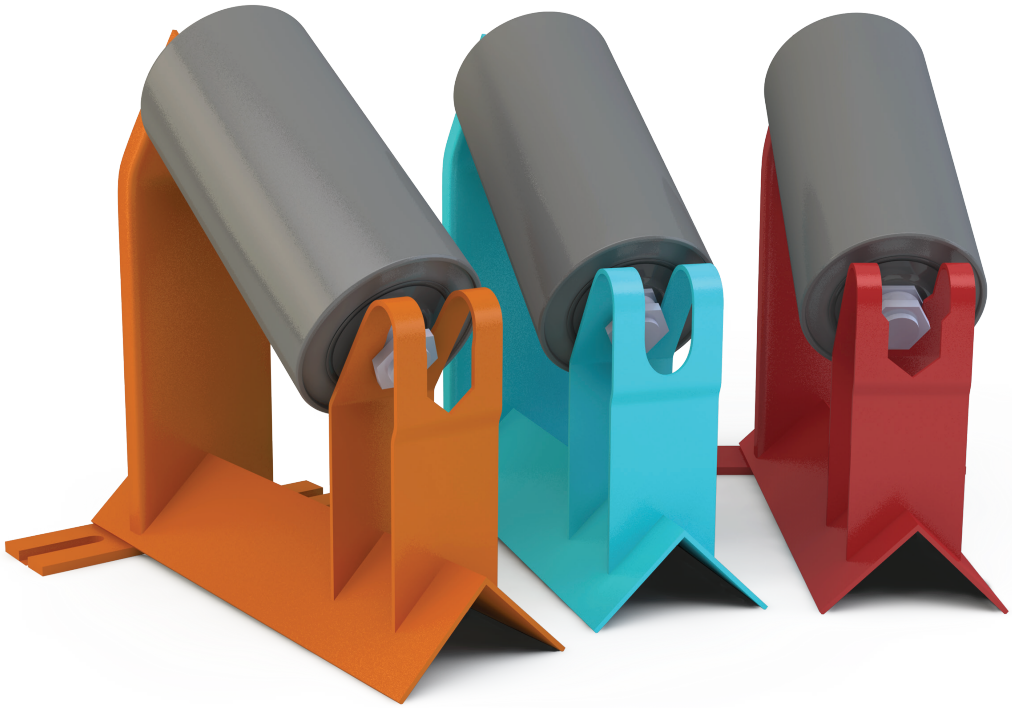

PRECISION PULLEY & IDLER

 PRECISION PULLEY & IDLER – ALL RIGHTS RESERVED

Retro Part Numbering System 4
Retro Nut Instructions for C/D Adapter Nuts 5

CONTINENTAL RETRO ROLLS®
CEMA C & Wire Ropes 6
CEMA D, E 7

FMC RETRO ROLLS®
CEMA C & D7000 8
CEMA D, E 9

GOODMAN RETRO ROLLS®
CEMA C 10
CEMA D, E 11

HEWITT-ROBINS RETRO ROLLS®
CEMA C 12
CEMA D, E 13

LUFF RETRO ROLLS® 14

REXNORD RETRO ROLLS® 15

STEPHENS-ADAMSON (SA) RETRO ROLLS® 16

SUPERIOR RETRO ROLLS® 17

TRANSALL/DBT RETRO ROLLS® 18

Retro Nut Dimensions for C/D Adapter Nuts 19

SPECIAL OR NON-STANDARD RETRO ROLLS
Retro Drawings/Diagrams 20
Retro Chart 21

PRECISION PULLEY & IDLER – ALL RIGHTS RESERVED

C5-FMTE-11.00

CEMA Series
B, C, D, E

Fits Idler Frame
See Below

Manufacturer's Roll Length
Round to nearest hundreth

Roll Diameter
4", 5", 6", 7"

Ider Type
TE = Equal Troughing
FL = Return Roll
TEI = Equal Troughing Impact
RI = Rubber Disc Return Roll
FLI = Flat Carrier Rubber Disc

ZINC NUT (standard)	
CR	Continental
FM	FMC Linkbelt
GM	Goodman
HR	Hewitt Robins
RX	Rexnord
SU	Superior

STEEL NUT (option/impact)	
CS	Continental
FS	FMC Linkbelt
GS	Goodman
HS	Hewitt Robins
RS	Rexnord
SS	Superior

BROACH END (No nut)	
SA	Stephens Adamson
LU	Luff
PR	Prescismeca
TR	Transall (DBT)

 PRECISION PULLEY & IDLER – ALL RIGHTS RESERVED

- Retro Roll® adapters are to be installed as shown in detail below for the particular idler manufacturer
- Please note the orientation of the hex and the location of the identification mark on the zinc nuts
- Adapter nuts are threaded on the shaft with UNF threads and may be adjusted to fit your application if necessary
- For replacement adapter nuts, order by part number indicated below. (T=Trougher, R=Return)

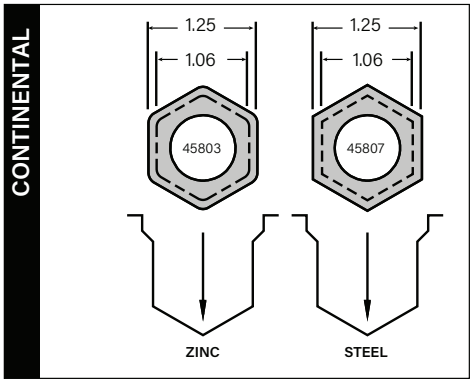

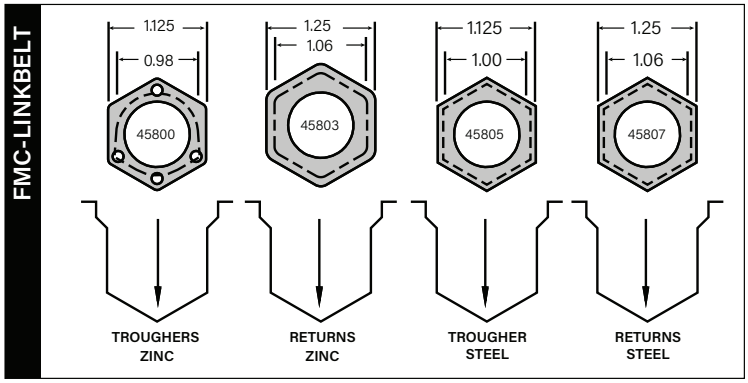

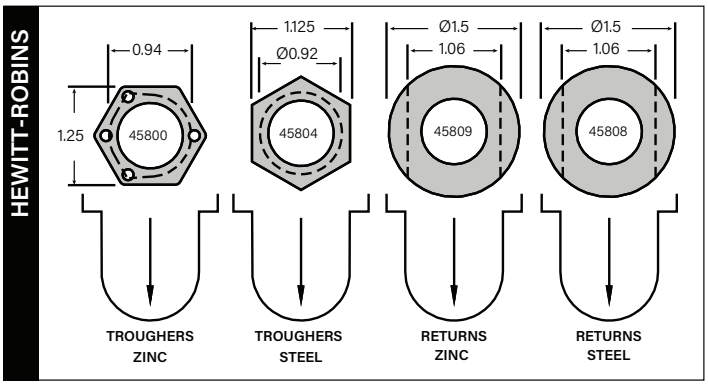

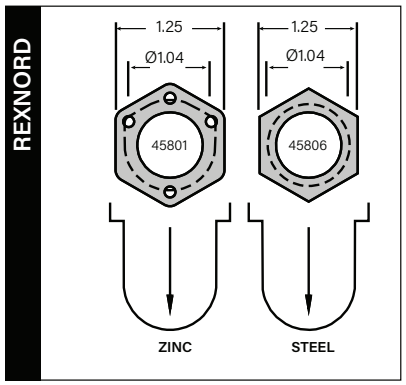

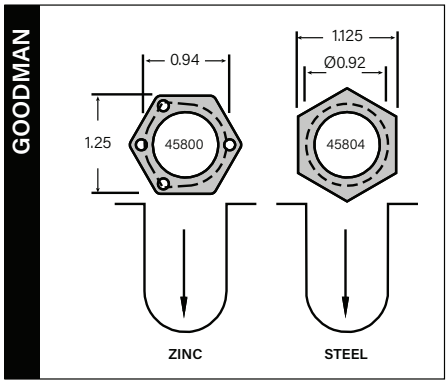

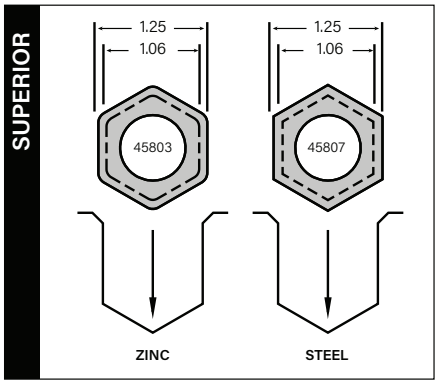

PRECISION PULLEY & IDLER – ALL RIGHTS RESERVED

CONTINENTAL CEMA C TROUGHER						
Belt Width	4" Roll Diameter		5" Roll Diameter		6" Roll Diameter	
	Part Number	Weight	Part Number	Weight	Part Number	Weight
18	C4-CRTE-7.00	7	C5-CRTE-7.00	8	C6-CRTE-7.00	10
24	C4-CRTE-9.00	8	C5-CRTE-9.00	10	C6-CRTE-9.00	12
30	C4-CRTE-11.00	9	C5-CRTE-11.00	11	C6-CRTE-11.00	14
36	C4-CRTE-13.00	10	C5-CRTE-13.00	13	C6-CRTE-13.00	16
42	C4-CRTE-15.00	11	C5-CRTE-15.00	14	C6-CRTE-15.00	18
48	C4-CRTE-17.00	13	C5-CRTE-17.00	16	C6-CRTE-17.00	20
54	C4-CRTE-19.00	14	C5-CRTE-19.00	17	C6-CRTE-19.00	21
60	C4-CRFL-21.00	15	C5-CRFL-21.00	19	C6-CRFL-21.00	23

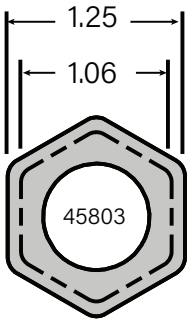

ZINC

CONTINENTAL CEMA C RETURN						
Belt Width	4" Roll Diameter		5" Roll Diameter		6" Roll Diameter	
	Part Number	Weight	Part Number	Weight	Part Number	Weight
24	C4-CRFL-27.00	19	C5-CRFL-27.00	23	C6-CRFL-27.00	29
30	C4-CRFL-33.00	23	C5-CRFL-33.00	28	C6-CRFL-33.00	35
36	C4-CRFL-39.00	27	C5-CRFL-39.00	33	C6-CRFL-39.00	40
42	C4-CRFL-45.00	31	C5-CRFL-45.00	37	C6-CRFL-45.00	46
48	C4-CRFL-51.00	34	C5-CRFL-51.00	42	C6-CRFL-51.00	52
54	C4-CRFL-57.00	38	C5-CRFL-57.00	46	C6-CRFL-57.00	57
60	C4-CRFL-63.00	42	C5-CRFL-63.00	51	C6-CRFL-63.00	63

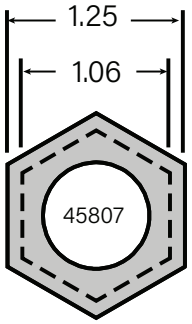

STEEL

CONTINENTAL CEMA C WIRE ROPE				
Belt Width	5" Roll Diameter		6" Roll Diameter	
	Part Number	Weight	Part Number	Weight
36	C5-CRWR-14.25	14	C6-CRWR-14.25	17
42	C5-CRWR-16.25	15	C6-CRWR-16.25	19
48	C5-CRWR-18.25	17	C6-CRWR-18.25	21
54	C5-CRWR-20.25	19	C6-CRWR-20.25	23
60	C5-CRWR-22.25	20	C6-CRWR-22.25	25

CONTINENTAL CEMA D WIRE ROPE				
Belt Width	5" Roll Diameter		6" Roll Diameter	
	Part Number	Weight	Part Number	Weight
36	D5-CRWR-14.25	16	D6-CRWR-14.25	19
42	D5-CRWR-16.25	18	D6-CRWR-16.25	21
48	D5-CRWR-18.25	18	D6-CRWR-18.25	24
54	D5-CRWR-20.25	21	D6-CRWR-20.25	26
60	D5-CRWR-22.25	23	D6-CRWR-22.25	29

- Steel idler rolls have zinc nuts on CEMA C & D idler rolls as standard. If steel nuts are desired, simply replace the CR in the part number with CS, e.g. C4-CRTE-7.00 becomes C4-CSTE-7.00 (E use steel nuts on all idler rolls)
- To specify ¼" thick steel idler roll, add H to the beginning of the part number, e.g. C4-CRTE-7.00 becomes HC4-CRTE-7.00
- To specify plastic sleeve over the steel idler rolls, add PS to the end of the part number, e.g. C4-CRTE-7.00 becomes C4-CRTE-7.00PS
- Rubber disc idler rolls have steel nuts (on the following page) as standard
- Zinc nuts are not available on E idler rolls or impact rolls
- These part numbers are for the idler rolls with the hex nut ends. Contact your local PPI sales representative if you need the idler roll with a broach end
- This is a partial list of Retro Rolls® that are available representing the most common requested items. Contact your PPI sales representative for options not listed here. For customized idler rolls, use the charts on page 20 and 21 and send information to PPI

 PRECISION PULLEY & IDLER – ALL RIGHTS RESERVED

STEEL IDLER ROLLS

RUBBER DISC IDLER ROLLS

	CONTINENTAL CEMA D TROUGHER				CONTINENTAL CEMA D IMPACT			
Belt Width	5″ Roll Diameter		6″ Roll Diameter		5″ Roll Diameter		6″ Roll Diameter	
	Part Number	Weight	Part Number	Weight	Part Number	Weight	Part Number	Weight
18	D5-CRTE-7.00	9	D6-CRTE-7.00	11	D5-CSTEI-6.50	9	D6-CSTEI-6.50	11
24	D5-CRTE-9.00	11	D6-CRTE-9.00	13	D5-CSTEI-8.50	12	D6-CSTEI-8.50	14
30	D5-CRTE-11.00	13	D6-CRTE-11.00	15	D5-CSTEI-10.50	14	D6-CSTEI-10.50	17
36	D5-CRTE-13.00	15	D6-CRTE-13.00	17	D5-CSTEI-12.50	17	D6-CSTEI-12.50	20
42	D5-CRTE-15.00	16	D6-CRTE-15.00	19	D5-CSTEI-14.50	20	D6-CSTEI-14.50	24
48	D5-CRTE-17.00	18	D6-CRTE-17.00	21	D5-CSTEI-16.50	22	D6-CSTEI-16.50	26
54	D5-CRTE-19.00	20	D6-CRTE-19.00	23	D5-CSTEI-18.50	24	D6-CSTEI-18.50	30
60	D5-CRFL-21.00	21	D6-CRFL-21.00	25	D5-CSTEI-20.50	26	D6-CSTEI-20.50	32
72	D5-CRFL-25.00	26	D6-CRFL-25.00	30	D5-CSTEI-24.50	34	D6-CSTEI-24.50	37

	CONTINENTAL CEMA D RETURN				CONTINENTAL CEMA D RUBBER DISC			
Belt Width	5″ Roll Diameter		6″ Roll Diameter		5″ Roll Diameter		6″ Roll Diameter	
	Part Number	Weight	Part Number	Weight	Part Number	Weight	Part Number	Weight
18	D5-CRFL-21.00	21	D6-CRFL-21.00	25	D5-CSRI-20.50	23	D6-CSRI-20.50	27
24	D5-CRFL-27.00	27	D6-CRFL-27.00	31	D5-CSRI-26.50	27	D6-CSRI-26.50	31
30	D5-CRFL-33.00	32	D6-CRFL-33.00	38	D5-CSRI-32.50	32	D6-CSRI-32.50	36
36	D5-CRFL-39.00	37	D6-CRFL-39.00	44	D5-CSRI-38.50	36	D6-CSRI-38.50	41
42	D5-CRFL-45.00	42	D6-CRFL-45.00	50	D5-CSRI-44.50	41	D6-CSRI-44.50	46
48	D5-CRFL-51.00	47	D6-CRFL-51.00	56	D5-CSRI-50.50	45	D6-CSRI-50.50	51
54	D5-CRFL-57.00	53	D6-CRFL-57.00	63	D5-CSRI-56.50	50	D6-CSRI-56.50	56
60	D5-CRFL-63.00	58	D6-CRFL-63.00	69	D5-CSRI-62.50	54	D6-CSRI-62.50	61
72	D5-CRFL-75.00	69	D6-CRFL-75.00	82	N/A		N/A	

	CONTINENTAL CEMA E TROUGHER				CONTINENTAL CEMA E IMPACT			
Belt Width	6″ Roll Diameter		7″ Roll Diameter		6″ Roll Diameter		7″ Roll Diameter	
	Part Number	Weight	Part Number	Weight	Part Number	Weight	Part Number	Weight
36	E6-CRTE-13.00	31	E7-CRTE-13.00	35	E6-CRTEI-12.75	39	E7-CRTEI-12.75	44
42	E6-CRTE-15.00	35	E7-CRTE-15.00	40	E6-CRTEI-14.75	44	E7-CRTEI-14.75	49
48	E6-CRTE-17.75	39	E7-CRTE-17.75	43	E6-CRTEI-17.50	50	E7-CRTEI-17.50	55
54	E6-CRTE-19.75	42	E7-CRTE-19.75	47	E6-CRTEI-19.50	55	E7-CRTEI-19.50	59
60	E6-CRTE-21.75	45	E7-CRTE-21.75	51	E6-CRTEI-21.50	59	E7-CRTEI-21.50	64
72	E6-CRTE-25.75	52	E7-CRTE-25.75	59	E6-CRTEI-25.50	70	E7-CRTEI-25.50	75
84	E6-CRTE-29.75	59	E7-CRTE-29.75	67	E6-CRTEI-29.50	78	E7-CRTEI-29.50	81
96	E6-CRTE-33.75	66	E7-CRTE-33.75	74	E6-CRTEI-33.50	89	E7-CRTEI-33.50	91

	CONTINENTAL CEMA E RETURN				CONTINENTAL CEMA E RUBBER DISC			
Belt Width	6″ Roll Diameter		7″ Roll Diameter		6″ Roll Diameter		7″ Roll Diameter	
	Part Number	Weight	Part Number	Weight	Part Number	Weight	Part Number	Weight
42	E6-CRFL-46.00	87	E7-CRFL-46.00	98	E6-CRRI-45.75	91	E7-CRRI-45.75	92
48	E6-CRFL-52.00	97	E7-CRFL-52.00	109	E6-CRRI-51.75	101	E7-CRRI-51.75	102
54	E6-CRFL-58.00	107	E7-CRFL-58.00	121	E6-CRRI-57.75	111	E7-CRRI-57.75	112
60	E6-CRFL-64.00	117	E7-CRFL-64.00	132	E6-CRRI-63.75	122	E7-CRRI-63.75	124
72	E6-CRFL-76.00	138	E7-CRFL-76.00	156	E6-CRRI-75.75	142	E7-CRRI-75.75	144
84	E6-CRFL-88.00	158	E7-CRFL-88.00	180	E6-CRRI-87.75	163	E7-CRRI-87.75	166
96	E6-CRFL-100.00	179	E7-CRFL-100.00	202	E6-CRRI-99.75	183	E7-CRRI-99.75	186

PRECISION PULLEY & IDLER – ALL RIGHTS RESERVED

FMC CEMA C TROUGHER						
Belt Width	4" Roll Diameter		5" Roll Diameter		6" Roll Diameter	
	Part Number	Weight	Part Number	Weight	Part Number	Weight
18	C4-FMTE-6.69	6	C5-FMTE-6.69	8	C6-FMTE-6.69	10
24	C4-FMTE-8.81	7	C5-FMTE-8.81	10	C6-FMTE-8.81	12
30	C4-FMTE-10.81	9	C5-FMTE-10.81	11	C6-FMTE-10.81	14
36	C4-FMTE-12.81	10	C5-FMTE-12.81	13	C6-FMTE-12.81	16
42	C4-FMTE-15.12	11	C5-FMTE-15.12	14	C6-FMTE-15.12	18
48	C4-FMTE-17.12	12	C5-FMTE-17.12	16	C6-FMTE-17.12	20
54	C4-FMTE-19.19	14	C5-FMTE-19.19	18	C6-FMTE-19.19	22
60	C4-FMTE-21.19	15	C5-FMTE-21.19	19	C6-FMTE-21.19	24

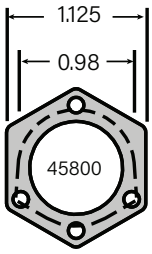

TROUGHERS ZINC

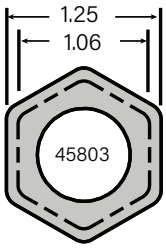

RETURNS ZINC

FMC CEMA C RETURN						
Belt Width	4" Roll Diameter		5" Roll Diameter		6" Roll Diameter	
	Part Number	Weight	Part Number	Weight	Part Number	Weight
18	C4-FMFL-20.62	16	C5-FMFL-20.62	19	C6-FMFL-20.62	23
24	C4-FMFL-26.62	19	C5-FMFL-26.62	23	C6-FMFL-26.62	29
30	C4-FMFL-32.62	23	C5-FMFL-32.62	28	C6-FMFL-32.62	35
36	C4-FMFL-38.62	26	C5-FMFL-38.62	33	C6-FMFL-38.62	40
42	C4-FMFL-44.62	30	C5-FMFL-44.62	37	C6-FMFL-44.62	46
48	C4-FMFL-50.62	34	C5-FMFL-50.62	42	C6-FMFL-50.62	52
54	C4-FMFL-56.62	38	C5-FMFL-56.62	46	C6-FMFL-56.62	57
60	C4-FMFL-62.62	42	C5-FMFL-62.62	51	C6-FMFL-62.62	63

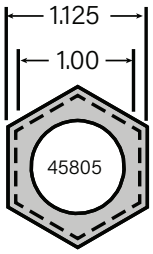

TROUGHER STEEL

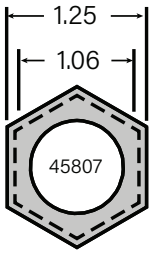

RETURNS STEEL

FMC CEMA D"7000" TROUGHER				
Belt Width	5" Roll Diameter		6" Roll Diameter	
	Part Number	Weight	Part Number	Weight
18	D5-SSTTE-6.62	9	D6-SSTTE-6.62	12
24	D5-SSTTE-8.75	11	D6-SSTTE-8.75	14
30	D5-SSTTE-10.75	13	D6-SSTTE-10.75	16
36	D5-SSTTE-12.75	15	D6-SSTTE-12.75	18
42	D5-SSTTE-15.06	17	D6-SSTTE-15.06	21
48	D5-SSTTE-17.06	18	D6-SSTTE-17.06	23
54	D5-SSTTE-19.12	20	D6-SSTTE-19.12	25
60	D5-SSTTE-21.12	22	D6-SSTTE-21.12	27
72	D5-SSTTE-25.12	26	D6-SSTTE-25.12	31

FMC CEMA D"7000" RETURN				
Belt Width	5" Roll Diameter		6" Roll Diameter	
	Part Number	Weight	Part Number	Weight
18	D5-SSTFL-20.81	21	D6-SSTFL-20.81	27
24	D5-SSTFL-26.81	27	D6-SSTFL-26.81	33
30	D5-SSTFL-32.81	32	D6-SSTFL-32.81	40
36	D5-SSTFL-38.81	37	D6-SSTFL-38.81	46
42	D5-SSTFL-44.81	42	D6-SSTFL-44.81	53
48	D5-SSTFL-50.81	47	D6-SSTFL-50.81	59
54	D5-SSTFL-56.81	52	D6-SSTFL-56.81	66
60	D5-SSTFL-62.81	58	D6-SSTFL-62.81	72
72	D5-SSTFL-74.81	70	D6-SSTFL-74.81	85

- Steel idler rolls have zinc nuts on CEMA C & D idler rolls as standard. If steel nuts are desired, simply replace the FM in the part number with FS, e.g. C5-FMTE-6.69 becomes C5-FSTE-6.69 (E use steel nuts on all idler rolls)
- To specify ¼" thick steel idler rolls, add H to the beginning of the part number, e.g. C5-FMTE-6.69 becomes HC5-FMTE-6.69
- To specify plastic sleeve over the steel idler rolls, add PS to the end of the part number, e.g. C5-FMTE-6.69 becomes C5-FMTE-6.69PS
- Rubber disc rolls have steel nuts (on the following page) as standard
- Zinc nuts are not available on E idler rolls
- Zinc nuts are not available on impact idler rolls
- This is a partial list of Retro Rolls® that are available representing the most common requested items. Contact your PPI Rep for options not listed
- For special or unusal rolls, use the charts on page 20 and 21 and send this info to PPI

 PRECISION PULLEY & IDLER – ALL RIGHTS RESERVED

STEEL IDLER ROLLS

RUBBER DISC IDLER ROLLS

Belt Width	FMC CEMA D"3000" TROUGHER				FMC CEMA D"3000" IMPACT			
	5" Roll Diameter		6" Roll Diameter		5" Roll Diameter		6" Roll Diameter	
	Part Number	Weight	Part Number	Weight	Part Number	Weight	Part Number	Weight
18	D5-FMTE-6.69	9	D6-FMTE-6.69	10	D5-FSTEI-6.19	9	D6-FSTEI-6.19	11
24	D5-FMTE-8.81	11	D6-FMTE-8.81	13	D5-FSTEI-8.19	12	D6-FSTEI-8.19	14
30	D5-FMTE-10.81	13	D6-FMTE-10.81	15	D5-FSTEI-10.19	14	D6-FSTEI-10.19	17
36	D5-FMTE-12.81	15	D6-FMTE-12.81	17	D5-FSTEI-12.19	17	D6-FSTEI-12.19	20
42	D5-FMTE-15.12	16	D6-FMTE-15.12	19	D5-FSTEI-14.50	20	D6-FSTEI-14.50	24
48	D5-FMTE-17.12	18	D6-FMTE-17.12	21	D5-FSTEI-16.50	22	D6-FSTEI-16.50	26
54	D5-FMTE-19.19	20	D6-FMTE-19.19	23	D5-FSTEI-18.56	25	D6-FSTEI-18.56	30
60	D5-FMTE-21.19	22	D6-FMTE-21.19	25	D5-FSTEI-20.56	27	D6-FSTEI-20.56	34
72	D5-FMTE-25.19	26	D6-FMTE-25.19	31	N/A		N/A	

Belt Width	FMC CEMA D"3000" RETURN				FMC CEMA D"3000" RUBBER DISC			
	5" Roll Diameter		6" Roll Diameter		5" Roll Diameter		6" Roll Diameter	
	Part Number	Weight	Part Number	Weight	Part Number	Weight	Part Number	Weight
18	D5-FMFL-20.62	22	D6-FMFL-20.62	25	D5-FSRI-20.75	28	D6-FSRI-20.75	32
24	D5-FMFL-26.62	27	D6-FMFL-26.62	31	D5-FSRI-26.75	34	D6-FSRI-26.75	39
30	D5-FMFL-32.62	32	D6-FMFL-32.62	38	D5-FSRI-32.75	40	D6-FSRI-32.75	45
36	D5-FMFL-38.62	37	D6-FMFL-38.62	44	D5-FSRI-38.75	47	D6-FSRI-38.75	52
42	D5-FMFL-44.62	42	D6-FMFL-44.62	50	D5-FSRI-44.75	53	D6-FSRI-44.75	58
48	D5-FMFL-50.62	47	D6-FMFL-50.62	56	D5-FSRI-50.75	59	D6-FSRI-50.75	65
54	D5-FMFL-56.62	53	D6-FMFL-56.62	63	D5-FSRI-56.75	65	D6-FSRI-56.75	71
60	D5-FMFL-62.62	58	D6-FMFL-62.62	69	D5-FSRI-62.75	71	D6-FSRI-62.75	78
72	C5-FMFL-74.62	69	D6-FMFL-74.62	82	D5-FSRI-74.75	84	D6-FSRI-74.75	92

Belt Width	FMC CEMA E TROUGHER				FMC CEMA E IMPACT			
	6" Roll Diameter		7" Roll Diameter		6" Roll Diameter		7" Roll Diameter	
	Part Number	Weight	Part Number	Weight	Part Number	Weight	Part Number	Weight
36	E6-FMTE-13.56	32	E7-FMTE-13.56	35	E6-FMTEI-13.50	43	E7-FMTEI-13.50	43
42	E6-FMTE-15.56	35	E7-FMTE-15.56	39	E6-FMTEI-15.50	47	E7-FMTEI-15.50	48
48	E6-FMTE-17.56	38	E7-FMTE-17.56	43	E6-FMTEI-17.50	53	E7-FMTEI-17.50	54
54	E6-FMTE-19.63	42	E7-FMTE-19.63	47	E6-FMTEI-19.56	58	E7-FMTEI-19.56	59
60	E6-FMTE-21.38	45	E7-FMTE-21.38	50	E6-FMTEI-21.31	62	E7-FMTEI-21.31	63
72	E6-FMTE-25.25	51	E7-FMTE-25.25	58	E6-FMTEI-25.19	71	E7-FMTEI-25.19	72
84	E6-FMTE-29.25	58	E7-FMTE-29.25	66	E6-FMTEI-29.19	81	E7-FMTEI-29.19	83
96	E6-FMTE-33.25	65	E7-FMTE-33.25	73	E6-FMTEI-33.19	91	E7-FMTEI-33.19	94

Belt Width	FMC CEMA E RETURN				FMC CEMA E RUBBER DISC			
	6" Roll Diameter		7" Roll Diameter		6" Roll Diameter		7" Roll Diameter	
	Part Number	Weight	Part Number	Weight	Part Number	Weight	Part Number	Weight
36	E6-FMFL-39.88	76	E7-FMFL-39.88	86	E6-FMRI-39.69	81	E7-FMRI-39.69	83
42	E6-FMFL-45.88	87	E7-FMFL-45.88	98	E6-FMRI-45.69	91	E7-FMRI-45.69	93
48	E6-FMFL-51.88	97	E7-FMFL-51.88	109	E6-FMRI-51.69	101	E7-FMRI-51.69	103
54	E6-FMFL-57.88	107	E7-FMFL-57.88	121	E6-FMRI-57.69	111	E7-FMRI-57.69	113
60	E6-FMFL-63.88	117	E7-FMFL-63.88	132	E6-FMRI-63.69	121	E7-FMRI-63.69	123
72	E6-FMFL-75.88	138	E7-FMFL-75.88	155	E6-FMRI-75.69	141	E7-FMRI-75.69	143
84	E6-FMFL-87.88	158	E7-FMFL-87.88	179	E6-FMRI-87.69	164	E7-FMRI-87.69	166
96	E6-FMFL-99.88	178	E7-FMFL-99.88	202	E6-FMRI-99.69	184	E7-FMRI-99.69	186

PRECISION PULLEY & IDLER – ALL RIGHTS RESERVED

GOODMAN CEMA C TROUGHER						
Belt Width	4" Roll Diameter		5" Roll Diameter		6" Roll Diameter	
	Part Number	Weight	Part Number	Weight	Part Number	Weight
18	C4-GMTE-7.00	6	C5-GMTE-7.00	8	C6-GMTE-7.00	10
24	C4-GMTE-9.13	8	C5-GMTE-9.13	10	C6-GMTE-9.13	12
30	C4-GMTE-11.19	9	C5-GMTE-11.19	11	C6-GMTE-11.19	14
36	C4-GMTE-13.25	11	C5-GMTE-13.25	13	C6-GMTE-13.25	16
42	C4-GMTE-15.38	12	C5-GMTE-15.38	14	C6-GMTE-15.38	18
48	C4-GMTE-17.44	13	C5-GMTE-17.44	16	C6-GMTE-17.44	20
54	C4-GMTE-19.50	14	C5-GMTE-19.50	18	C6-GMTE-19.50	22
60	C4-GMTE-21.63	16	C5-GMTE-21.63	19	C6-GMTE-21.63	24

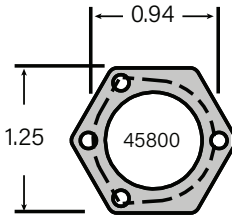

ZINC

GOODMAN CEMA C RETURN						
Belt Width	4" Roll Diameter		5" Roll Diameter		6" Roll Diameter	
	Part Number	Weight	Part Number	Weight	Part Number	Weight
18	C4-GMFL-21.00	16	C5-GMFL-21.00	19	C6-GMFL-21.00	24
24	C4-GMFL-27.00	19	C5-GMFL-27.00	24	C6-GMFL-27.00	29
30	C4-GMFL-33.00	23	C5-GMFL-33.00	28	C6-GMFL-33.00	35
36	C4-GMFL-39.00	27	C5-GMFL-39.00	33	C6-GMFL-39.00	41
42	C4-GMFL-45.00	31	C5-GMFL-45.00	37	C6-GMFL-45.00	46
48	C4-GMFL-51.00	35	C5-GMFL-51.00	42	C6-GMFL-51.00	52
54	C4-GMFL-57.00	38	C5-GMFL-57.00	47	C6-GMFL-57.00	58
60	C4-GMFL-63.00	42	C5-GMFL-63.00	51	C6-GMFL-63.00	63

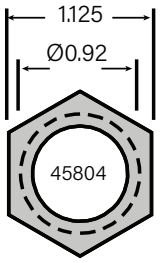

STEEL

- Steel idler rolls have zinc nuts on CEMA C & D idler rolls as standard. If steel nuts are desired, simply replace the GM in the part number with GS, e.g. D5-GMTE-7.00 becomes D5-GSTE-7.00 (E use steel nuts on all idler rolls)
- To specify ¼" thick steel idler rolls, add H to the beginning of the part number, e.g. D5-GMTE-7.00 becomes HD5-GMTE-7.00
- To specify plastic sleeve over the steel idler rolls, add PS to the end of the part number, e.g. D5-GMTE-7.00 becomes D5-GMTE-7.00PS
- Rubber disc rolls have steel nuts (on the following page) as standard
- Zinc nuts are not available on E idler rolls
- Zinc nuts are not available on impact idler rolls

 PRECISION PULLEY & IDLER – ALL RIGHTS RESERVED

STEEL IDLER ROLLS / RUBBER DISC IDLER ROLLS

Belt Width	GOODMAN CEMA D TROUGHER				GOODMAN CEMA D IMPACT			
	5″ Roll Diameter		6″ Roll Diameter		5″ Roll Diameter		6″ Roll Diameter	
	Part Number	Weight	Part Number	Weight	Part Number	Weight	Part Number	Weight
18	D5-GMTE-7.00	9	D6-GMTE-7.00	10	D5-GSTEI-7.00	9	D6-GSTEI-7.00	11
24	D5-GMTE-9.13	12	D6-GMTE-9.13	13	D5-GSTEI-9.13	12	D6-GSTEI-9.13	14
30	D5-GMTE-11.19	13	D6-GMTE-11.19	15	D5-GSTEI-11.19	15	D6-GSTEI-11.19	18
36	D5-GMTE-13.25	15	D6-GMTE-13.25	17	D5-GSTEI-13.25	17	D6-GSTEI-13.25	20
42	D5-GMTE-15.38	16	D6-GMTE-15.38	19	D5-GSTEI-15.38	20	D6-GSTEI-15.38	24
48	D5-GMTE-17.44	18	D6-GMTE-17.44	21	D5-GSTEI-17.44	22	D6-GSTEI-17.44	26
54	D5-GMTE-19.50	20	D6-GMTE-19.50	23	D5-GSTEI-19.50	25	D6-GSTEI-19.50	30
60	D5-GMTE-21.63	22	D6-GMTE-21.63	26	D5-GSTEI-21.63	27	D6-GSTEI-21.63	34
72	D5-GMTE-25.75	27	D6-GMTE-25.75	31	N/A		N/A	

Belt Width	GOODMAN CEMA D RETURN				GOODMAN CEMA D RUBBER DISC			
	5″ Roll Diameter		6″ Roll Diameter		5″ Roll Diameter		6″ Roll Diameter	
	Part Number	Weight	Part Number	Weight	Part Number	Weight	Part Number	Weight
18	D5-GMFL-21.00	22	D6-GMFL-21.00	25	D5-GSRI-21.00	23	D6-GSRI-21.00	27
24	D5-GMFL-27.00	27	D6-GMFL-27.00	32	D5-GSRI-27.00	27	D6-GSRI-27.00	32
30	D5-GMFL-33.00	32	D6-GMFL-33.00	38	D5-GSRI-33.00	32	D6-GSRI-33.00	36
36	D5-GMFL39.00	37	D6-GMFL39.00	44	D5-GSRI-39.00	36	D6-GSRI-39.00	41
42	D5-GMFL-45.00	42	D6-GMFL-45.00	50	D5-GSRI-45.00	41	D6-GSRI-45.00	46
48	D5-GMFL-51.00	48	D6-GMFL-51.00	57	D5-GSRI-51.00	45	D6-GSRI-51.00	51
54	D5-GMFL-57.00	53	D6-GMFL-57.00	63	D5-GSRI-57.00	50	D6-GSRI-57.00	56
60	D5-GMFL-63.00	58	D6-GMFL-63.00	69	D5-GSRI-63.00	55	D6-GSRI-63.00	61
72	D5-GMFL-75.00	71	D6-GMFL-75.00	83	N/A		N/A	

Belt Width	GOODMAN CEMA E TROUGHER				GOODMAN CEMA E IMPACT			
	6″ Roll Diameter		7″ Roll Diameter		6″ Roll Diameter		7″ Roll Diameter	
	Part Number	Weight	Part Number	Weight	Part Number	Weight	Part Number	Weight
36	E6-GMTE-13.75	32	E7-GMTE-13.75	36	E6-GMTEI-13.75	39	E7-GMTEI-13.75	44
42	E6-GMTE-15.75	35	E7-GMTE-15.75	40	E6-GMTE-15.75	44	E7-GMTEI-15.75	49
48	E6-GMTE-17.75	39	E7-GMTE-17.75	44	E6-GMTEI-17.75	50	E7-GMTEI-17.75	55
54	E6-GMTE-19.75	42	E7-GMTE-19.75	47	E6-GMTEI-19.75	55	E7-GMTEI-19.75	59
60	E6-GMTE-21.75	46	E7-GMTE-21.75	51	E6-GMTEI-21.75	59	E7-GMTEI-21.75	64
72	E6-GMTE-25.75	52	E7-GMTE-25.75	59	E6-GMTEI-25.75	70	E7-GMTEI-25.75	75
84	E6-GMTE-29.75	59	E7-GMTE-29.75	67	E6-GMTEI-29.75	80	E7-GMTEI-29.75	86
96	E6-GMTE-33.75	66	E7-GMTE-33.75	74	E6-GMTEI-33.75	90	E7-GMTEI-33.75	95

Belt Width	GOODMAN CEMA E RETURN				GOODMAN CEMA E RUBBER DISC			
	6″ Roll Diameter		7″ Roll Diameter		6″ Roll Diameter		7″ Roll Diameter	
	Part Number	Weight	Part Number	Weight	Part Number	Weight	Part Number	Weight
36	E6-GMFL-40.00	74	E7-GMFL-40.00	86	E6-GMRI-40.00	81	E7-GMRI-40.00	82
42	E6-GMFL-46.00	87	E7-GMFL-46.00	98	E6-GMRI-46.00	91	E7-GMRI-46.00	92
48	E6-GMFL-52.00	97	E7-GMFL-52.00	109	E6-GMRI-52.00	101	E7-GMRI-52.00	102
54	E6-GMFL-58.00	107	E7-GMFL-58.00	121	E6-GMRI-58.00	111	E7-GMRI-58.00	113
60	E6-GMFL-64.00	117	E7-GMFL-64.00	133	E6-GMRI-64.00	122	E7-GMRI-64.00	124
72	E6-GMFL-76.00	138	E7-GMFL-76.00	156	E6-GMRI-76.00	142	E7-GMRI-76.00	144
84	E6-GMFL-88.00	158	E7-GMFL-88.00	179	E6-GMRI-88.00	163	E7-GMRI-88.00	166
96	E6-GMFL-100.00	179	E7-GMFL-100.00	202	E6-GMRI-100.00	183	E7-GMRI-100.00	186

PRECISION PULLEY & IDLER – ALL RIGHTS RESERVED

HEWITT-ROBINS CEMA C TROUGHER						
Belt Width	4" Roll Diameter		5" Roll Diameter		6" Roll Diameter	
	Part Number	Weight	Part Number	Weight	Part Number	Weight
18	C4-HRTE-7.00	7	C5-HRTE-7.00	8	C6-HRTE-7.00	10
24	C4-HRTE-9.00	8	C5-HRTE-9.00	10	C6-HRTE-9.00	12
30	C4-HRTE-11.00	9	C5-HRTE-11.00	11	C6-HRTE-11.00	14
36	C4-HRTE-13.00	11	C5-HRTE-13.00	13	C6-HRTE-13.00	16
42	C4-HRTE-15.00	12	C5-HRTE-15.00	14	C6-HRTE-15.00	18
48	C4-HRTE-17.00	13	C5-HRTE-17.00	16	C6-HRTE-17.00	20
54	C4-HRTE-19.00	14	C5-HRTE-19.00	18	C6-HRTE-19.00	22
60	C4-HRTE-21.00	16	C5-HRTE-21.00	19	C6-HRTE-21.00	24

HEWITT-ROBINS CEMA C RETURN				
Belt Width	5" Roll Diameter		6" Roll Diameter	
	Part Number	Weight	Part Number	Weight
18	C5-HZFL-21.00	20	C6-HZFL-21.00	26
24	C5-HZFL-27.00	24	C6-HZFL-27.00	30
30	C5-HZFL-33.00	29	C6-HZFL-33.00	35
36	C5-HZFL-39.00	34	C6-HZFL-39.00	41
42	C5-HZFL-45.00	38	C6-HZFL-45.00	47
48	C5-HZFL-51.00	42	C6-HZFL-51.00	52
54	C5-HZFL-57.00	47	C6-HZFL-57.00	58
60	C5-HZFL-63.00	52	C6-HZFL-63.00	64

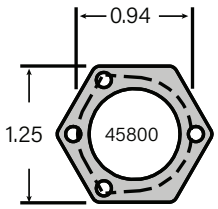

TROUGHERS ZINC

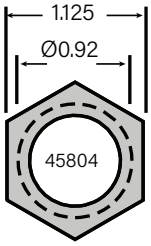

TROUGHERS STEEL

- Steel idler rolls have zinc nuts on CEMA C & D idler rolls as standard. If steel nuts are desired, simply replace the GM in the part number with GS, e.g. D5-GMTE-7.00 becomes D5-GSTE-7.00 (E use steel nuts on all idler rolls)
- To specify ¼" thick steel idler rolls, add H to the beginning of the part number, e.g. D5-GMTE-7.00 becomes HD5-GMTE-7.00
- To specify plastic sleeve over the steel idler rolls, add PS to the end of the part number, e.g. D5-GMTE-7.00 becomes D5-GMTE-7.00PS
- Rubber disc idler rolls have steel nuts (on the following page) as standard
- Zinc nuts are not available on E idler rolls
- Zinc nuts are not available on impact idler rolls

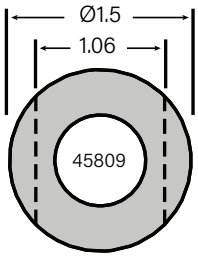

RETURNS ZINC

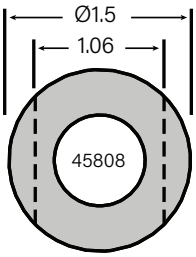

RETURNS STEEL

 PRECISION PULLEY & IDLER – ALL RIGHTS RESERVED

STEEL IDLER ROLLS

RUBBER DISC IDLER ROLLS

Belt Width	HEWITT-ROBINS CEMA D TROUGHER				HEWITT-ROBINS CEMA D IMPACT			
	5" Roll Diameter		6" Roll Diameter		5" Roll Diameter		6" Roll Diameter	
	Part Number	Weight	Part Number	Weight	Part Number	Weight	Part Number	Weight
18	D5-HRTE-7.00	10	D6-HRTE-7.00	11	D5-HSTEI-6.50	10	D6-HSTEI-6.50	12
24	D5-HRTE-9.00	11	D6-HRTE-9.00	13	D5-HSTEI-8.50	12	D6-HSTEI-8.50	15
30	D5-HRTE-11.00	13	D6-HRTE-11.00	15	D5-HSTEI-10.50	15	D6-HSTEI-10.50	18
36	D5-HRTE-13.00	15	D6-HRTE-13.00	17	D5-HSTEI-12.50	17	D6-HSTEI-12.50	20
42	D5-HRTE-15.00	16	D6-HRTE-15.00	19	D5-HSTEI-14.50	20	D6-HSTEI-14.50	24
48	D5-HRTE-17.00	18	D6-HRTE-17.00	21	D5-HSTEI-16.50	22	D6-HSTEI-16.50	26
54	D5-HRTE-19.00	20	D6-HRTE-19.00	23	D5-HSTEI-18.50	25	D6-HSTEI-18.50	30
60	D5-HRTE-21.00	22	D6-HRTE-21.00	26	D5-HSTEI-20.50	27	D6-HSTEI-20.50	34

Belt Width	HEWITT-ROBINS CEMA D RETURN				HEWITT-ROBINS CEMA D RUBBER DISC			
	5" Roll Diameter		6" Roll Diameter		5" Roll Diameter		6" Roll Diameter	
	Part Number	Weight	Part Number	Weight	Part Number	Weight	Part Number	Weight
18	D5-HZFL-21.00	22	D6-HZFL-21.00	26	D5-HXRI-20.50	23	D6-HXRI-20.50	27
24	D5-HZFL-27.00	27	D6-HZFL-27.00	35	D5-HXRI-26.50	28	D6-HXRI-26.50	32
30	D5-HZFL-33.00	33	D6-HZFL-33.00	39	D5-HXRI-32.50	32	D6-HXRI-32.50	37
36	D5-HZFL-39.00	38	D6-HZFL-39.00	45	D5-HXRI-38.50	37	D6-HXRI-38.50	42
42	D5-HZFL-45.00	43	D6-HZFL-45.00	51	D5-HXRI-44.50	47	D6-HXRI-44.50	47
48	D5-HZFL-51.00	48	D6-HZFL-51.00	57	D5-HXRI-50.50	46	D6-HXRI-50.50	52
54	D5-HZFL-57.00	53	D6-HZFL-57.00	64	D5-HXRI-56.50	51	D6-HXRI-56.50	56
60	D5-HZFL-63.00	58	D6-HZFL-63.00	70	D5-HXRI-62.50	55	D6-HXRI-62.50	61

Belt Width	HEWITT-ROBINS CEMA E TROUGHER				HEWITT-ROBINS CEMA E IMPACT			
	6" Roll Diameter		7" Roll Diameter		6" Roll Diameter		7" Roll Diameter	
	Part Number	Weight	Part Number	Weight	Part Number	Weight	Part Number	Weight
36	E6-HRTE-13.75	32	E7-HRTE-13.75	36	E6-HRTEI-13.75	43	E7-HRTEI-13.75	44
42	E6-HRTE-15.75	36	E7-HRTE-15.75	40	E6-HRTEI-15.75	48	E7-HRTEI-15.75	49
48	E6-HRTE-17.75	39	E7-HRTE-17.75	44	E6-HRTEI-17.75	54	E7-HRTEI-17.75	55
54	E6-HRTE-19.75	42	E7-HRTE-19.75	48	E6-HRTEI-19.75	58	E7-HRTEI-19.75	60
60	E6-HRTE-21.75	46	E7-HRTE-21.75	51	E6-HRTEI-21.75	63	E7-HRTEI-21.75	65
72	E6-HRTE-25.75	53	E7-HRTE-25.75	59	E6-HRTEI-25.75	73	E7-HRTEI-25.75	74
84	E6-HRTE-29.75	59	E7-HRTE-29.75	67	E6-HRTEI-29.75	84	E7-HRTEI-29.75	86
96	E6-HRTE-33.75	66	E7-HRTE-33.75	75	E6-HRTEI-33.75	93	E7-HRTEI-33.75	95

Belt Width	HEWITT-ROBINS CEMA E RETURN				HEWITT-ROBINS CEMA E RUBBER DISC			
	6" Roll Diameter		7" Roll Diameter		6" Roll Diameter		7" Roll Diameter	
	Part Number	Weight	Part Number	Weight	Part Number	Weight	Part Number	Weight
36	E6-HRFL-40.00	90	E7-HRFL-40.00	87	E6-HRRI-35.50	81	E7-HRRI-35.50	82
42	E6-HRFL-46.00	87	E7-HRFL-46.00	98	E6-HRRI-41.50	91	E7-HRRI-41.50	93
48	E6-HRFL-52.00	97	E7-HRFL-52.00	110	E6-HRRI-47.50	101	E7-HRRI-47.50	103
54	E6-HRFL-58.00	107	E7-HRFL-58.00	121	E6-HRRI-53.50	111	E7-HRRI-53.50	113
60	E6-HRFL-64.00	118	E7-HRFL-64.00	133	E6-HRRI-59.50	122	E7-HRRI-59.50	124
72	E6-HRFL-76.00	138	E7-HRFL-76.00	156	E6-HRRI-71.50	142	E7-HRRI-71.50	144
84	E6-HRFL-88.00	158	E7-HRFL-88.00	179	E6-HRRI-83.50	163	E7-HRRI-83.50	166
96	E6-HRFL-100.00	179	E7-HRFL-100.00	202	E6-HRRI-95.50	183	E7-HRRI-95.50	186

PRECISION PULLEY & IDLER – ALL RIGHTS RESERVED

LUFF CEMA C TROUGHER						
Belt Width	4" Roll Diameter		5" Roll Diameter		6" Roll Diameter	
	Part Number	Weight	Part Number	Weight	Part Number	Weight
18	C4-LUTE-6.75	7	C5-LUTE-6.75	8	C6-LUTE-6.75	10
24	C4-LUTE-8.75	9	C5-LUTE-8.75	10	C6-LUTE-8.75	12
30	C4-LUTE-10.75	10	C5-LUTE-10.75	11	C6-LUTE-10.75	14
36	C4-LUTE-12.75	11	C5-LUTE-12.75	13	C6-LUTE-12.75	16
42	C4-LUTE-14.75	12	C5-LUTE-14.75	14	C6-LUTE-14.75	18
48	C4-LUTE-16.75	14	C5-LUTE-16.75	16	C6-LUTE-16.75	20
54	C4-LUTE-18.75	15	C5-LUTE-18.75	17	C6-LUTE-18.75	22
60	C4-LUTE-20.75	16	C5-LUTE-20.75	19	C6-LUTE-20.75	24

LUFF CEMA C RETURN						
Belt Width	4" Roll Diameter		5" Roll Diameter		6" Roll Diameter	
	Part Number	Weight	Part Number	Weight	Part Number	Weight
18	C4-LUFL-21.75	18	C5-LUFL-21.75	21	C6-LUFL-21.75	26
24	C4-LUFL-27.75	22	C5-LUFL-27.75	25	C6-LUFL-27.75	32
30	C4-LUFL-33.75	25	C5-LUFL-33.75	30	C6-LUFL-33.75	37
36	C4-LUFL-39.75	29	C5-LUFL-39.75	35	C6-LUFL-39.75	43
42	C4-LUFL-45.75	33	C5-LUFL-45.75	39	C6-LUFL-45.75	49
48	C4-LUFL-51.75	37	C5-LUFL-51.75	44	C6-LUFL-51.75	54
54	C4-LUFL-57.75	41	C5-LUFL-57.75	48	C6-LUFL-57.75	60
60	C4-LUFL-63.75	45	C5-LUFL-63.75	53	C6-LUFL-63.75	66

LUFF CEMA D TROUGHER				
Belt Width	5" Roll Diameter		6" Roll Diameter	
	Part Number	Weight	Part Number	Weight
18	D5-LUTE-6.75	10	D6-LUTE-6.75	12
24	D5-LUTE-8.75	11	D6-LUTE-8.75	14
30	D5-LUTE-10.75	13	D6-LUTE-10.75	16
36	D5-LUTE-12.75	15	D6-LUTE-12.75	18
42	D5-LUTE-14.75	17	D6-LUTE-14.75	20
48	D5-LUTE-16.75	18	D6-LUTE-16.75	22
54	D5-LUTE-18.75	20	D6-LUTE-18.75	24
60	D5-LUTE-20.75	22	D6-LUTE-20.75	26

LUFF CEMA D RETURN				
Belt Width	5" Roll Diameter		6" Roll Diameter	
	Part Number	Weight	Part Number	Weight
18	D5-LUFL-21.75	24	D6-LUFL-21.75	29
24	D5-LUFL-27.75	11	D6-LUFL-27.75	35
30	D5-LUFL-33.75	34	D6-LUFL-33.75	42
36	D5-LUFL-39.75	39	D6-LUFL-39.75	48
42	D5-LUFL-45.75	45	D6-LUFL-45.75	54
48	D5-LUFL-51.75	50	D6-LUFL-51.75	60
54	D5-LUFL-57.75	55	D6-LUFL-57.75	67
60	D5-LUFL-63.75	60	D6-LUFL-63.75	73

 PRECISION PULLEY & IDLER – ALL RIGHTS RESERVED

REXNORD CEMA C TROUGHER						
Belt Width	4" Roll Diameter		5" Roll Diameter		6" Roll Diameter	
	Part Number	Weight	Part Number	Weight	Part Number	Weight
18	C4-RXTE-7.00	6	C5-FMTE-6.69	8	C6-FMTE-6.69	10
24	C4-RXTE-9.00	7	C5-RXTE-9.00	10	C6-RXTE-9.00	12
30	C4-RXTE-11.00	9	C5-RXTE-11.00	11	C6-RXTE-11.00	14
36	C4-RXTE-13.00	10	C5-RXTE-13.00	13	C6-RXTE-13.00	16
42	C4-RXTE-15.00	11	C5-RXTE-15.00	14	C6-RXTE-15.00	18
48	C4-RXTE-17.00	12	C5-RXTE-17.00	16	C6-RXTE-17.00	20
54	C4-RXTE-19.00	14	C5-RXTE-19.00	17	C6-RXTE-19.00	21
60	C4-RXTE-21.00	15	C5-RXFL-21.00	19	C6-RXFL-21.00	29

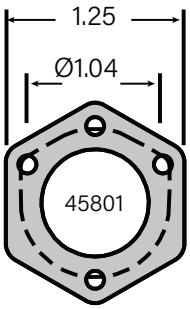

ZINC

REXNORD CEMA C RETURN						
Belt Width	4" Roll Diameter		5" Roll Diameter		6" Roll Diameter	
	Part Number	Weight	Part Number	Weight	Part Number	Weight
18	C4-RXFL-21.00	15	C5-RXFL-21.00	19	C6-FMFL-20.62	23
24	C4-RXFL-27.00	19	C5-RXFL-27.00	23	C6-FMFL-26.62	29
30	C4-RXFL-33.00	23	C5-RXFL-33.00	28	C6-FMFL-32.62	35
36	C4-RXFL-39.00	28	C5-RXFL-39.00	19	C6-RXFL-21.00	29
42	C4-RXFL-45.00	30	C5-RXFL-45.00	24	C6-RXFL-27.00	29
48	C4-RXFL-51.00	34	C5-RXFL-51.00	28	C6-RXFL-33.00	35
54	C4-RXFL-57.00	38	C5-RXFL-57.00	33	C6-RXFL-39.00	41
60	N/A		C5-RXFL-63.00	40	C6-RXFL-45.00	46

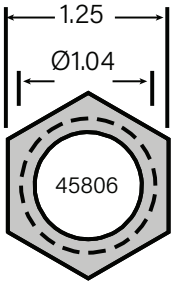

STEEL

REXNORD CEMA D TROUGHER				
Belt Width	5" Roll Diameter		6" Roll Diameter	
	Part Number	Weight	Part Number	Weight
18	D5-RXTE-7.00	9	D6-RXTE-7.00	11
24	D5-RXTE-9.00	11	D6-RXTE-9.00	13
30	D5-RXTE-11.00	13	D6-RXTE-11.00	15
36	D5-RXTE-13.00	15	D6-RXTE-13.00	17
42	D5-RXTE-15.00	16	D6-RXTE-15.00	19
48	D5-RXTE-17.00	18	D6-RXTE-17.00	21
54	D5-RXTE-19.00	20	D6-RXTE-19.00	23
60	D5-RXFL-21.00	21	D6-RXFL-21.00	25

REXNORD CEMA D IMPACT			
5" Roll Diameter		6" Roll Diameter	
Part Number	Weight	Part Number	Weight
D5-RSTEI-7.00	9	D6-RSTEI-7.00	11
D5-RSTEI-9.00	12	D6-RSTEI-9.00	14
D5-RSTEI-11.00	14	D6-RSTEI-11.00	17
D5-RSTEI-13.00	17	D6-RSTEI-13.00	20
D5-RSTEI-15.00	20	D6-RSTEI-15.00	24
D5-RSTEI-17.00	22	D6-RSTEI-17.00	26
D5-RSTEI-19.00	24	D6-RSTEI-19.00	30
D5-RSTEI-21.00	26	D6-RSTEI-21.00	32

REXNORD CEMA D RETURN				
Belt Width	5" Roll Diameter		6" Roll Diameter	
	Part Number	Weight	Part Number	Weight
18	D5-RXFL-21.00	21	D6-RXFL-21.00	25
24	D5-RXFL-27.00	27	D6-RXFL-27.00	31
30	D5-RXFL-33.00	32	D6-RXFL-33.00	38
36	D5-RXFL-39.00	37	D6-RXFL-39.00	44
42	D5-RXFL-45.00	42	D6-RXFL-45.00	50
48	D5-RXFL-51.00	47	D6-RXFL-51.00	56
54	D5-RXFL-57.00	53	D6-RXFL-57.00	63
60	D5-RXFL-63.00	58	D6-RXFL-63.00	69

REXNORD CEMA D RUBBER DISC			
5" Roll Diameter		6" Roll Diameter	
Part Number	Weight	Part Number	Weight
D5-RSRI-21.00	23	D6-RSRI-21.00	27
D5-RSRI-27.00	27	D6-RSRI-27.00	31
D5-RSRI-33.00	32	D6-RSRI-33.00	36
D5-RSRI-39.00	36	D6-RSRI-39.00	41
D5-RSRI-45.00	41	D6-RSRI-45.00	46
D5-RSRI-51.00	45	D6-RSRI-51.00	51
D5-RSRI-57.00	50	D6-RSRI-57.00	56
D5-RSRI-63.00	54	D6-RSRI-63.00	61

PRECISION PULLEY & IDLER – ALL RIGHTS RESERVED

SA CEMA C TROUGHER				
Belt Width	5" Roll Diameter		6" Roll Diameter	
	Part Number	Weight	Part Number	Weight
18	C5-SATE-6.88	11	C6-SATE-6.88	10
24	C5-SATE-8.94	13	C6-SATE-8.94	12
30	C5-SATE-11.00	14	C6-SATE-11.00	14
36	C5-SATE-13.13	16	C6-SATE-13.13	16
42	C5-SATE-15.18	18	C6-SATE-15.18	18
48	C5-SATE-17.25	20	C6-SATE-17.25	20
54	C5-SATE-19.31	22	C6-SATE-19.31	22
60	C5-SATE-21.44	24	C6-SATE-21.44	24

SA CEMA C RETURN				
Belt Width	5" Roll Diameter		6" Roll Diameter	
	Part Number	Weight	Part Number	Weight
18	C5-SAFL-23.25	21	C6-SAFL-23.25	26
24	C5-SAFL-29.25	25	C6-SAFL-29.25	32
30	C5-SAFL-35.25	30	C6-SAFL-35.25	37
36	C5-SAFL-41.25	35	C6-SAFL-41.25	43
42	C5-SAFL-47.25	39	C6-SAFL-47.25	47
48	C5-SAFL-53.25	44	C6-SAFL-53.25	52
54	C5-SAFL-59.25	48	C6-SAFL-59.25	60
60	C5-SAFL-65.25	53	C6-SAFL-65.25	66

SA CEMA D TROUGHER				
Belt Width	5" Roll Diameter		6" Roll Diameter	
	Part Number	Weight	Part Number	Weight
18	D5-SATE-6.88	10	D6-SATE-6.88	11
24	D5-SATE-8.94	12	D6-SATE-8.94	14
30	D5-SATE-11.00	13	D6-SATE-11.00	16
36	D5-SATE-13.13	15	D6-SATE-13.13	18
42	D5-SATE-15.18	17	D6-SATE-15.18	20
48	D5-SATE-17.25	19	D6-SATE-17.25	22
54	D5-SATE-19.31	20	D6-SATE-19.31	24
60	D5-SATE-21.44	22	D6-SATE-21.44	27

SA CEMA D IMPACT			
5" Roll Diameter		6" Roll Diameter	
Part Number	Weight	Part Number	Weight
D5-SATEI-6.88	12	D6-SATEI-6.88	14
D5-SATEI-8.94	14	D6-SATEI-8.94	17
D5-SATEI-11.00	18	D6-SATEI-11.00	21
D5-SATEI-13.13	21	D6-SATEI-13.13	25
D5-SATEI-15.18	24	D6-SATEI-15.18	28
D5-SATEI-17.25	27	D6-SATEI-17.25	32
D5-SATEI-19.31	31	D6-SATEI-19.31	36
D5-SATEI-21.44	33	D6-SATEI-21.44	39

SA CEMA D RETURN				
Belt Width	5" Roll Diameter		6" Roll Diameter	
	Part Number	Weight	Part Number	Weight
18	D5-SAFL-23.25	24	D6-SAFL-23.25	29
24	D5-SAFL-29.25	29	D6-SAFL-29.25	35
30	D5-SAFL-35.25	34	D6-SAFL-35.25	51
36	D5-SAFL-41.25	39	D6-SAFL-41.25	48
42	D5-SAFL-47.25	44	D6-SAFL-47.25	54
48	D5-SAFL-53.25	50	D6-SAFL-53.25	60
54	D5-SAFL-59.25	55	D6-SAFL-59.25	66
60	D5-SAFL-65.25	60	D6-SAFL-65.25	73

SA CEMA D RUBBER DISC			
5" Roll Diameter		6" Roll Diameter	
Part Number	Weight	Part Number	Weight
D5-SARI-21.25	30	D6-SARI-21.25	34
D5-SARI-27.25	37	D6-SARI-27.25	42
D5-SARI-33.25	43	D6-SARI-33.25	48
D5-SARI-39.25	49	D6-SARI-39.25	55
D5-SARI-45.25	56	D6-SARI-45.25	61
D5-SARI-51.25	62	D6-SARI-51.25	68
D5-SARI-57.25	68	D6-SARI-57.25	74
D5-SARI-63.25	74	D6-SARI-63.25	81

 PRECISION PULLEY & IDLER – ALL RIGHTS RESERVED

SUPERIOR CEMA C TROUGHER						
Belt Width	4" Roll Diameter		5" Roll Diameter		6" Roll Diameter	
	Part Number	Weight	Part Number	Weight	Part Number	Weight
18	C4-SUTE-7.06	7	C5-SUTE-7.06	8	C6-SUTE-7.06	10
24	C4-SUTE-9.06	8	C5-SUTE-9.06	10	C6-SUTE-9.06	12
30	C4-SUTE-11.06	9	C5-SUTE-11.06	11	C6-SUTE-11.06	14
36	C4-SUTE-13.06	10	C5-SUTE-13.06	13	C6-SUTE-13.06	16
42	C4-SUTE-15.06	12	C5-SUTE-15.06	14	C6-SUTE-15.06	18
48	C4-SUTE-17.06	13	C5-SUTE-17.06	16	C6-SUTE-17.06	20
54	C4-SUTE-19.06	14	C5-SUTE-19.06	17	C6-SUTE-19.06	21
60	C4-SUTE-21.06	15	C5-SUTE-21.06	19	C6-SUTE-21.06	23

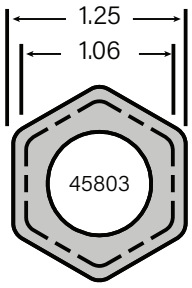

ZINC

SUPERIOR CEMA C RETURNS						
Belt Width	4" Roll Diameter		5" Roll Diameter		6" Roll Diameter	
	Part Number	Weight	Part Number	Weight	Part Number	Weight
18	C4-SUFL-21.31	16	C5-SUFL-21.31	19	C6-SUFL-21.31	24
24	C4-SUFL-27.31	19	C5-SUFL-27.31	24	C6-SUFL-27.31	29
30	C4-SUFL-33.31	23	C5-SUFL-33.31	28	C6-SUFL-33.31	35
36	C4-SUFL-39.31	27	C5-SUFL-39.31	33	C6-SUFL-39.31	41
42	C4-SUFL-45.31	31	C5-SUFL-45.31	37	C6-SUFL-45.31	46
48	C4-SUFL-51.31	35	C5-SUFL-51.31	42	C6-SUFL-51.31	52
54	C4-SUFL-57.31	38	C5-SUFL-57.31	47	C6-SUFL-57.31	58
60	C4-SUFL-63.31	42	C5-SUFL-63.31	51	C6-SUFL-63.31	63

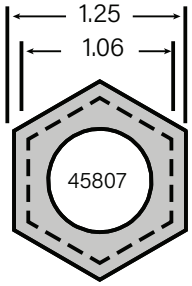

STEEL

SUPERIOR CEMA D TROUGHER				
Belt Width	5" Roll Diameter		6" Roll Diameter	
	Part Number	Weight	Part Number	Weight
18	D5-SUTE-7.06	9	D6-SUTE-7.06	11
24	D5-SUTE-9.06	11	D6-SUTE-9.06	13
30	D5-SUTE-11.06	13	D6-SUTE-11.06	15
36	D5-SUTE-13.06	15	D6-SUTE-13.06	17
42	D5-SUTE-15.06	16	D6-SUTE-15.06	19
48	D5-SUTE-17.06	18	D6-SUTE-17.06	21
54	D5-SUTE-19.06	20	D6-SUTE-19.06	23
60	D5-SUTE-21.06	21	D6-SUTE-21.06	25

SUPERIOR CEMA D IMPACT			
5" Roll Diameter		6" Roll Diameter	
Part Number	Weight	Part Number	Weight
D5-SSTEI-7.06	9	D6-SSTEI-7.06	11
D5-SSTEI-9.06	12	D6-SSTEI-9.06	14
D5-SSTEI-11.06	14	D6-SSTEI-11.06	17
D5-SSTEI-13.06	17	D6-SSTEI-13.06	20
D5-SSTEI-15.06	20	D6-SSTEI-15.06	24
D5-SSTEI-17.06	22	D6-SSTEI-17.06	26
D5-SSTEI-19.06	24	D6-SSTEI-19.06	30
D5-SSTEI-21.06	26	D6-SSTEI-21.06	32

SUPERIOR CEMA D RETURN				
Belt Width	5" Roll Diameter		6" Roll Diameter	
	Part Number	Weight	Part Number	Weight
18	D5-SUFL-21.31	22	D6-SUFL-21.31	25
24	D5-SUFL-27.31	27	D6-SUFL-27.31	32
30	D5-SUFL-33.31	32	D6-SUFL-33.31	38
36	D5-SUFL-39.31	37	D6-SUFL-39.31	44
42	D5-SUFL-45.31	42	D6-SUFL-45.31	50
48	D5-SUFL-51.31	48	D6-SUFL-51.31	57
54	D5-SUFL-57.31	53	D6-SUFL-57.31	63
60	D5-SUFL-63.31	58	D6-SUFL-63.31	69

SUPERIOR CEMA D RUBBER DISC			
5" Roll Diameter		6" Roll Diameter	
Part Number	Weight	Part Number	Weight
D5-SSRI-19.88	23	D6-SSRI-19.88	27
D5-SSRI-26.13	27	D6-SSRI-26.13	32
D5-SSRI-31.75	32	D6-SSRI-31.75	36
D5-SSRI-38.38	36	D6-SSRI-38.38	41
D5-SSRI-44.00	41	D6-SSRI-44.00	46
D5-SSRI-50.25	45	D6-SSRI-50.25	51
D5-SSRI-55.88	50	D6-SSRI-55.88	56
D5-SSRI-62.50	55	D6-SSRI-62.50	61

PRECISION PULLEY & IDLER – ALL RIGHTS RESERVED

DBT CEMA D TROUGHER				
Belt Width	5" Roll Diameter		6" Roll Diameter	
	Part Number	Weight	Part Number	Wt
18	D5-TRTE-6.63	9	D6-TRTE-6.63	13
24	D5-TRTE-8.75	11	D6-TRTE-8.75	15
30	D5-TRTE-10.81	13	D6-TRTE-10.81	17
36	D5-TRTE-12.88	15	D6-TRTE-12.88	19
42	D5-TRTE-15.00	17	D6-TRTE-15.00	21
48	D5-TRTE-17.06	18	D6-TRTE-17.06	23
54	D5-TRTE-19.13	20	D6-TRTE-19.13	25
60	D5-TRTE-21.25	22	D6-TRTE-21.25	27

DBT CEMA D RETURNS				
Belt Width	5" Roll Diameter		6" Roll Diameter	
	Part Number	Weight	Part Number	Weight
18	D5-TRFL-20.68	13	D6-TRFL-20.68	30
24	D5-TRFL-26.68	27	D6-TRFL-26.68	36
30	D5-TRFL-32.68	32	D6-TRFL-32.68	43
36	D5-TRFL-38.68	37	D6-TRFL-38.68	49
42	D5-TRFL-44.68	42	D6-TRFL-44.68	55
48	D5-TRFL-50.68	47	D6-TRFL-50.68	61
54	D5-TRFL-56.68	53	D6-TRFL-56.68	68
60	D5-TRFL-62.68	58	D6-TRFL-62.68	74

 PRECISION PULLEY & IDLER – ALL RIGHTS RESERVED

ZINC

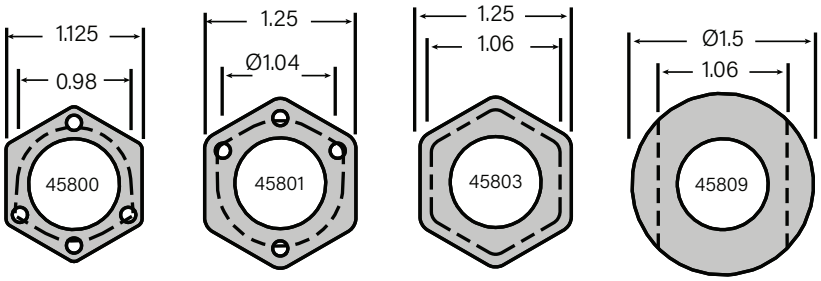

STEEL

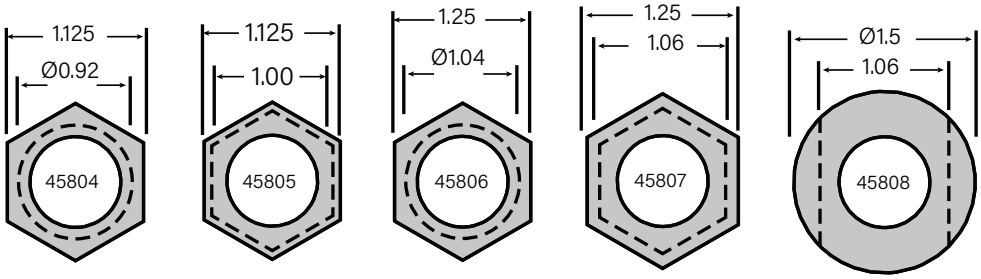

PRECISION PULLEY & IDLER – ALL RIGHTS RESERVED

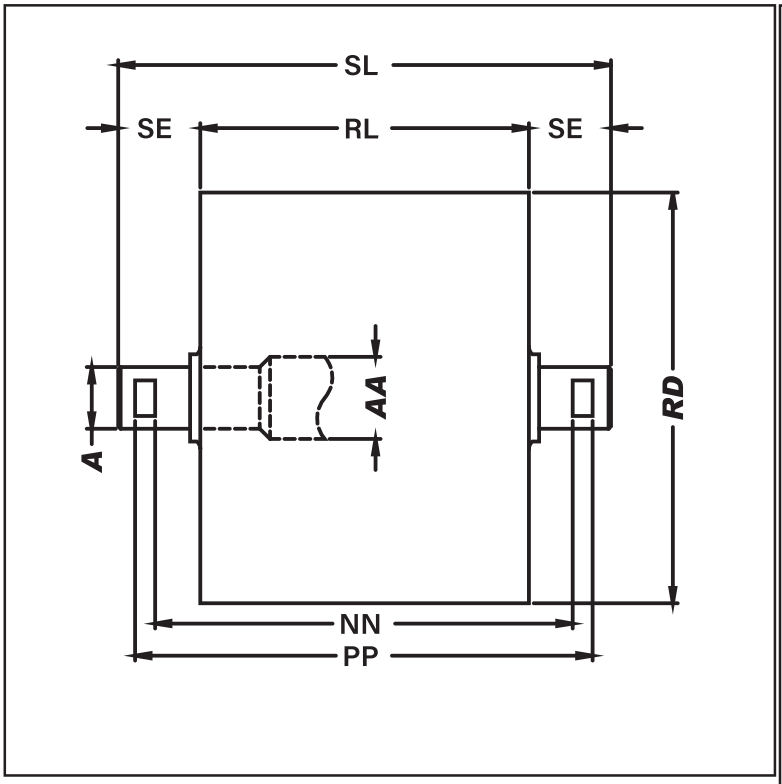

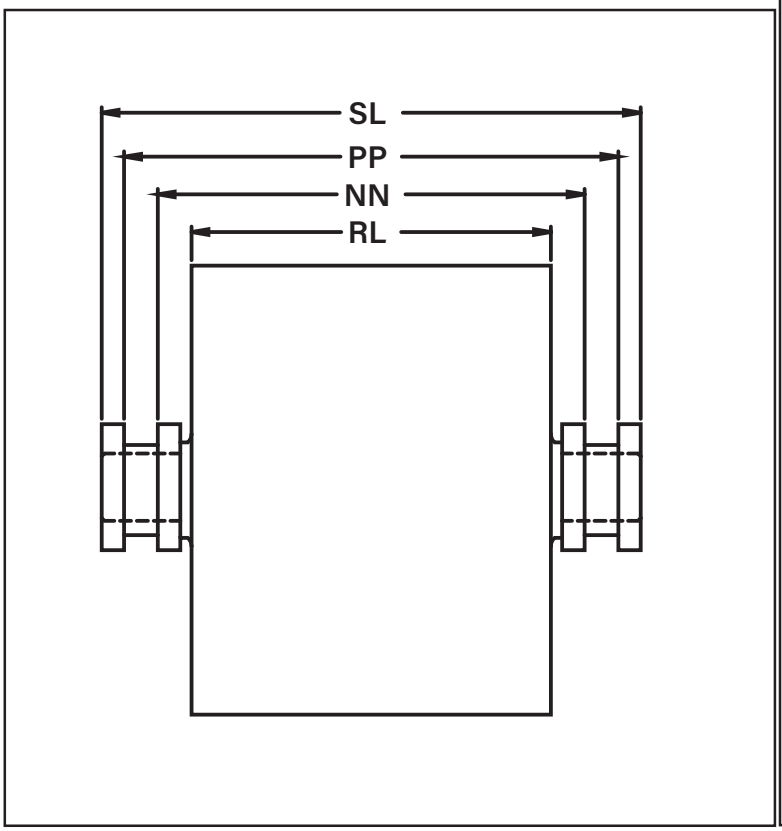

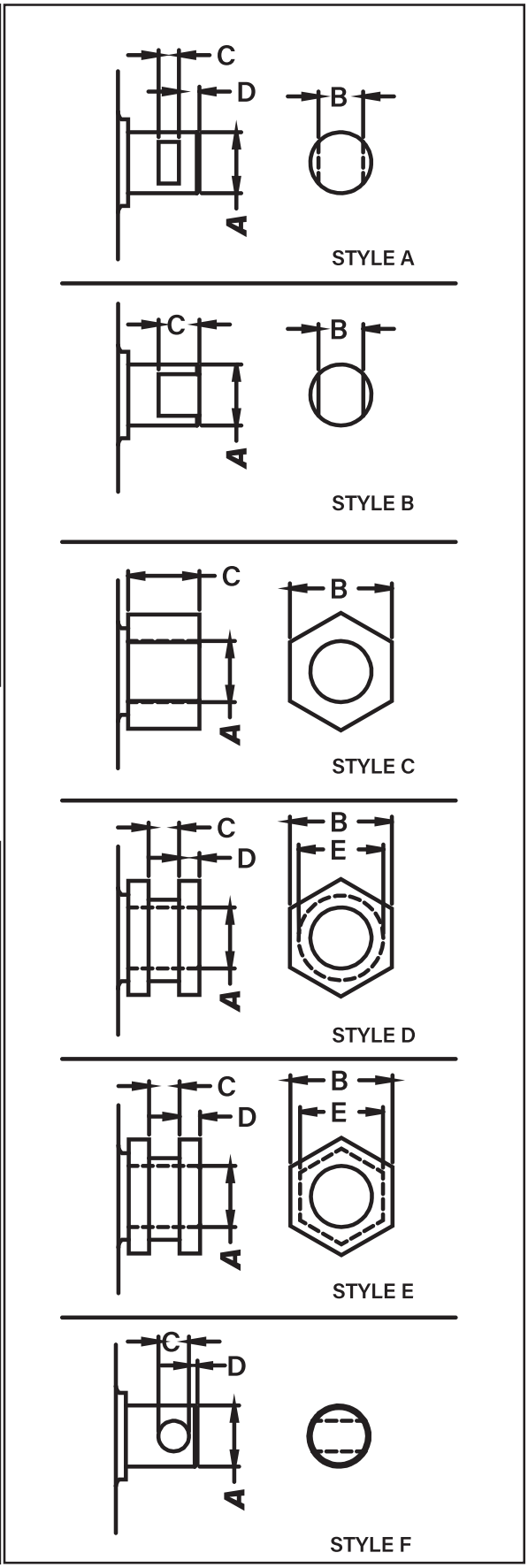

 PRECISION PULLEY & IDLER – ALL RIGHTS RESERVED

SHAFT STYLE							
RD ROLL DIAMETER							
RL ROLL LENGTH							
SL SHAFT LENGTH							
SE SHAFT EXTENSION							
NN NUT TO NUT							
PP NUT TO NUT							
A SHAFT DIAMETER							
AA SHAFT DIAMETER							
B ACROSS FLATS							
C BROACH WIDTH							
D FLANGE WIDTH							
E MINOR NUT WIDTH							

CUSTOMER _____ **PHONE** _____

LOCATION _____ **FAX** _____

CONTACT _____ **NOTES** _____

PRECISION PULLEY & IDLER – ALL RIGHTS RESERVED

PRECISION PULLEY & IDLER

www.ppi-global.com | sales@ppi-global.com

Product shown are for illustrative purposes only and may display optional accessories or components. Please contact your sales representative for more information on product specifications.
PPI respectively reserves the right to make changes in engineering, design and specifications; add improvements; or discontinue manufacturing at any time without notice obligation.
PPI and its respective logos are trademarks of Precision, Inc. in the US and or other countries.

Copyright ©2020 Precision Pulley & Idler, all rights reserved.