ENGINEERING & DIMENSIONS

MARCO® IDLERS

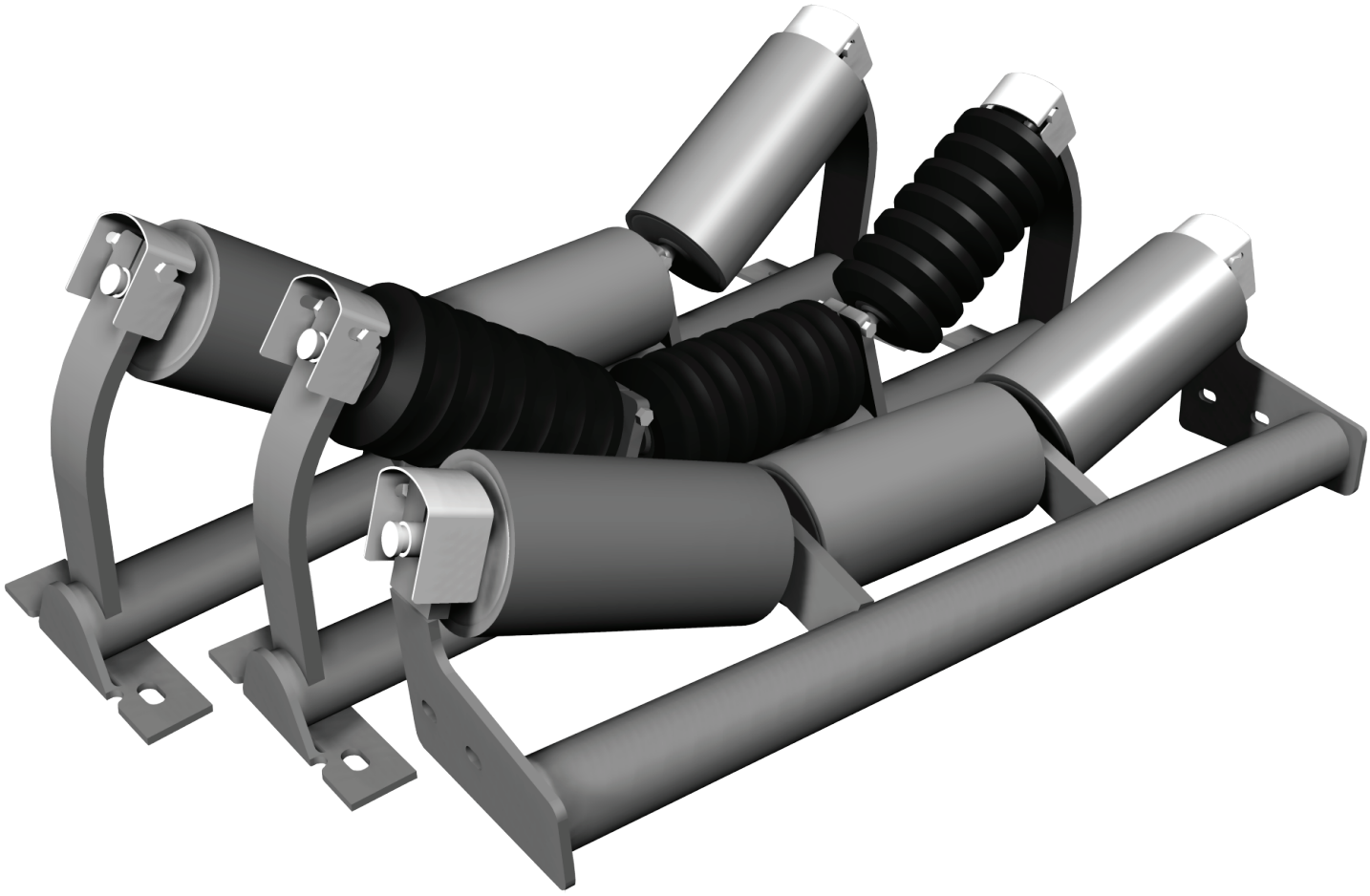

PRECISION PULLEY & IDLER

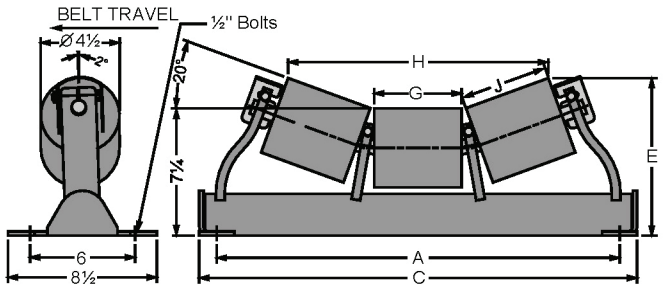

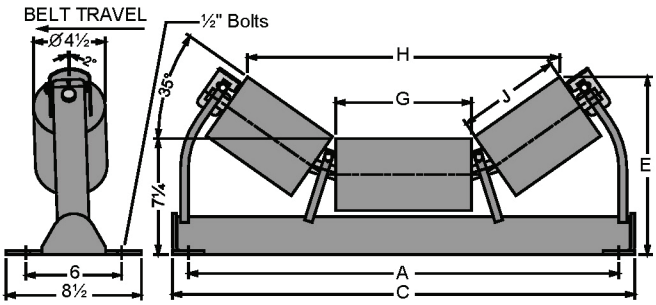

M15 STANDARD 20º TROUGHER

PART NUMBER	BELT WIDTH	A	C	E	G	H	J	WEIGHT
M15-14	14	23	25	9	5	14 7/8	5	26
M15-16	16	25	27	9	6 1/2	16 3/8	5	29
M15-18	18	27	29	9 1/2	6 1/2	19 1/4	6 1/2	32
M15-20	20	29	31	9 1/2	8 1/2	21 1/4	6 1/2	33
M15-24	24	33	35	10 1/4	8 1/2	25	8 1/2	37
M15-30	30	39	41	10 7/8	10 1/2	30 3/4	10 1/2	41
M15-36	36	45	47	11 5/8	12 1/2	36 1/2	12 1/2	45
M15-42	42	51	53	11 5/8	18 1/2	42 1/2	12 1/2	47

M15P PICKING IDLER 20º TOUGHER (LONG CENTER ROLL)

PART NUMBER	BELT WIDTH	A	C	E	G	H	J	WEIGHT
M15P-24	24	33	35	9 1/2	12 1/2	25 1/4	6 1/2	37
M15P-30	30	39	41	9 1/2	18 1/2	31 1/4	6 1/2	41
M15P-36	36	45	47	9 1/2	24 1/2	37 1/4	6 1/2	45
M15P-42	42	51	53	9 1/2	30 1/2	43 1/4	6 1/2	49

MA15 NARROW BASE 20º TROUGHER STYLE A

PART NUMBER	BELT WIDTH	A	C	E	G	H	J	WEIGHT
MA15-14	14	20 3/4	22 3/4	9	5	14 7/8	5	25
MA15-16	16	20 3/4	22 3/4	9	6 1/2	16 3/8	5	28
MA15-18	18	24 3/4	26 3/4	9 1/2	6 1/2	19 1/4	6 1/2	31
MA15-20	20	24 3/4	26 3/4	9 1/2	8 1/2	21 1/4	6 1/2	32
MA15-24	24	28 3/4	30 3/4	10 1/4	8 1/2	25	8 1/2	36
MA15-30	30	39	41	10 7/8	10 1/2	30 3/4	10 1/2	40
MA15-36	36	42 1/2	44 1/2	11 5/8	12 1/2	36 1/2	12 1/2	45
MA15-42	42	50 1/2	52 1/2	11 5/8	18 1/2	42 1/2	12 1/2	48

M1534 EQUAL 35º TROUGHER

PART NUMBER	BELT WIDTH	A	C	E	G	H	J	WEIGHT
M1534-18	18	27	29	11 1/8	6 1/2	17 1/2	6 1/2	34
M1534-20	20	29	31	11 1/8	8 1/2	19 1/2	6 1/2	36
M1534-24	24	33	35	12 1/4	8 1/2	22 3/4	8 1/2	38
M1534-30	30	39	41	13 3/8	10 1/2	28 1/4	10 1/2	45
M1534-36	36	45	47	14 1/2	12 1/2	33 3/8	12 1/2	53
M1534-42	42	51	53	15 5/8	14 1/2	38 1/2	14 1/2	61

M1535 PICKING 35º TOUGHER (LONG CENTER ROLL)

PART NUMBER	BELT WIDTH	A	C	E	G	H	J	WEIGHT
M1535-18	18	27	29	11 1/8	8 1/2	19 1/2	6 1/2	35
M1535-20	20	29	31	11 1/8	10 1/2	21 1/2	6 1/2	37
M1535-24	24	33	35	12 1/4	10 1/2	24 3/4	8 1/2	39
M1535-30	30	39	41	12 1/4	16 1/2	30 3/4	8 1/2	44
M1535-36	36	45	47	12 1/4	22 1/2	36 3/4	8 1/2	49
M1535-42	42	51	53	13 3/8	24 1/2	42	10 1/2	53

 PRECISION PULLEY & IDLER – ALL RIGHTS RESERVED

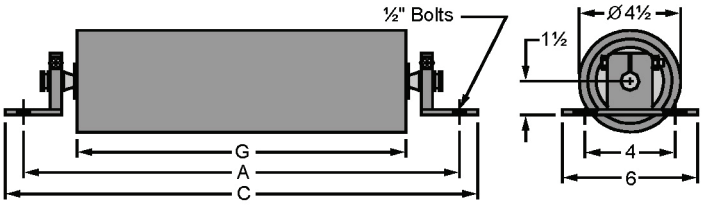

ALTERNATE MOUNTING

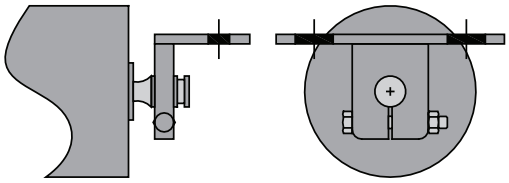

M15R STANDARD RETURN IDLER (STEEL)

PART NUMBER	BELT WIDTH	A	C	G	WEIGHT
M15R-14	14	23	24 5/8	18 1/2	16
M15R-16	16	25	26 5/8	20 1/2	17
M15R-18	18	27	28 5/8	22 1/2	19
M15R-20	20	29	30 5/8	24 1/2	20
M15R-24	24	33	34 5/8	28 1/2	22
M15R-30	30	39	40 5/8	34 1/2	26
M15R-36	36	45	46 5/8	40 1/2	29
M15R-42	42	51	52 5/8	46 1/2	33

MA15R NARROW BASE RETURN (STEEL)

PART NUMBER	BELT WIDTH	A	C	G	WEIGHT
MA15R-14/16	14	20 3/4	22 3/8	16 1/2	15
	16				
MA15R-18/20	18	24 3/4	26 3/8	20 1/2	18
	20				
MA15R-24	24	28 3/4	30 3/8	24 1/2	20
MA15R-30	30	39	40 5/8	35 1/2	26
MA15R-36	36	42 1/2	44 1/8	38 1/2	28
MA15R-42	42	50 1/2	521/8	45 1/2	32

MD15R LOW HEADROOM RETURN IDLER STYLE D (STEEL)

PART NUMBER	BELT WIDTH	A	C	G	WEIGHT
MD15R-14	14	23	24 5/8	18 1/2	16
MD15R-16	16	25	26 5/8	20 1/2	17
MD15R-18	18	27	28 5/8	22 1/2	19
MD15R-20	20	29	30 5/8	24 1/2	20
MD15R-24	24	33	34 5/8	28 1/2	22
MD15R-30	30	39	40 5/8	34 1/2	26
MD15R-36	36	45	46 5/8	40 1/2	29
MD15R-42	42	51	52 5/8	46 1/2	33

M15RM RUBBER DISC RETURN

PART NUMBER	BELT WIDTH	TL	RL	A	C	WEIGHT
M15RM-14	14	18 1/4	13	23	24 5/8	19
M15RM-16	16	20 1/4	15	25	26 5/8	20
M15RM-18	18	22 1/4	17	27	28 5/8	21
M15RM-20	20	24 1/4	19	29	30 5/8	22
M15RM-24	24	28 1/4	23	33	34 5/8	24
M15RM-30	30	34 1/4	29	39	40 5/8	27
M15RM-36	36	40 1/4	35	45	46 5/8	31
M15RM-42	42	46 1/4	41	51	52 5/8	34

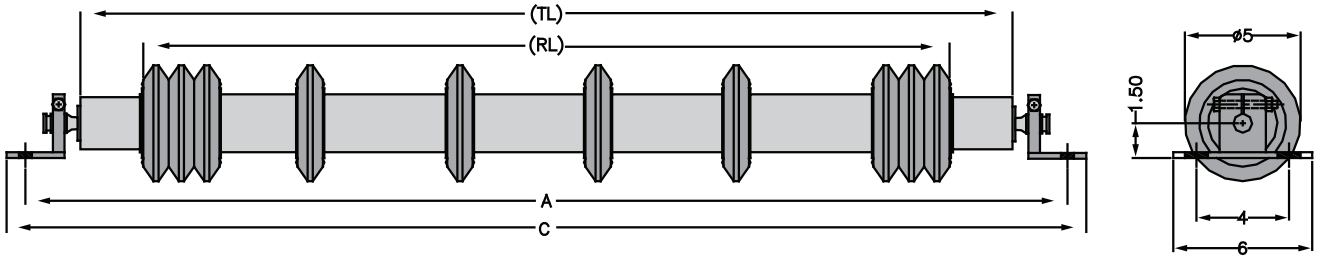

M15FS FLAT ROLL

PART NUMBER	BELT WIDTH	A	C	G	WEIGHT
M15FS-14	14	23	24 5/8	18 1/2	15
M15FS-16	16	25	26 5/8	20 1/2	16
M15FS-18	18	27	28 5/8	22 1/2	17
M15FS-20	20	29	30 5/8	24 1/2	18
M15FS-22	22	31	32 5/8	26 1/2	19
M15FS-24	24	33	34 5/8	28 1/2	20
M15FS-26	26	35	36 5/8	30 1/2	21
M15FS-28	28	37	38 5/8	32 1/2	22
M15FS-30	30	39	40 5/8	34 1/2	23
M15FS-32	32	41	42 5/8	36 1/2	24
M15FS-34	34	43	44 5/8	38 1/2	25
M15FS-36	36	45	46 5/8	40 1/2	26
M15FS-38	38	47	48 5/8	42 1/2	27
M15FS-40	40	49	50 5/8	44 1/2	28
M15FS-42	42	51	52 5/8	46 1/2	29
M15FS-44	44	53	54 5/8	48 1/2	30
M15FS-46	46	55	56 5/8	50 1/2	31
M15FS-48	48	57	58 5/8	52 1/2	32

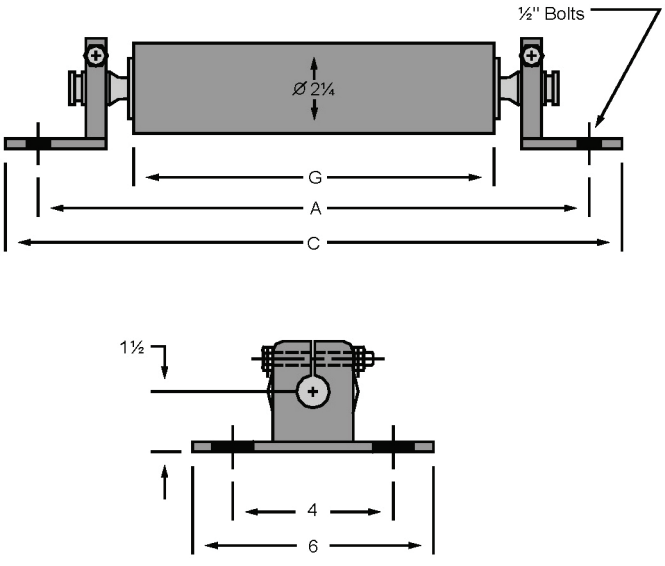

PRECISION PULLEY & IDLER – ALL RIGHTS RESERVED

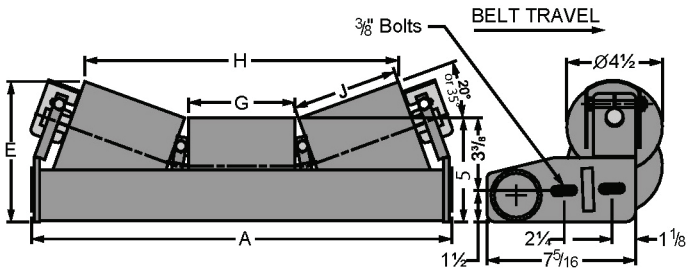

MD15 EQUAL 20° LOW-HEADROOM TROUGHER STYLE D

PART NUMBER	BELT WIDTH	A	E	G	H	J	WEIGHT
MD15-14	14	19 3/4	6 5/8	5	14 3/4	5	26
MD15-16	16	21 3/4	6 5/8	6 1/2	16 1/4	5	27
MD15-18	18	23 3/4	7 1/8	6 1/2	19	6 1/2	29
MD15-20	20	25 3/4	7 1/8	8 1/2	21 1/4	6 1/2	30
MD15-24	24	29 3/4	7 7/8	8 1/2	25	8 1/2	33
MD15-30	30	35 3/4	8 1/2	10 1/2	30 3/4	10 1/2	39
MD15-36	36	41 3/4	9 1/8	12 1/2	36 1/2	12 1/2	49
MD15-42	42	47 3/4	9 1/8	18 1/2	42 3/8	12 1/2	55

MD1534 EQUAL 35° LOW-HEADROOM TROUGHER STYLE D

PART NUMBER	BELT WIDTH	A	E	G	H	J	WEIGHT
MD1534-18	18	23 3/4	8 11/16	6 1/2	17 5/8	6 1/2	33
MD1534-20	20	25 3/4	8 11/16	8 1/2	19 5/8	6 1/2	34
MD1534-24	24	29 3/4	9 7/8	8 1/2	23	8 1/2	37
MD1534-30	30	35 3/4	10 15/16	10 1/2	28 1/4	10 1/2	42
MD1534-36	36	41 3/4	12 1/16	12 1/2	33 1/2	12 1/2	52
MD1534-42	42	47 3/4	13 5/16	14 1/2	38 3/4	14 1/2	58

M15G – GUIDE ROLL
The M15G is designed to be bolted onto the end bracket of the troughing idler to help guide the belt. Weight = 4½ lb each

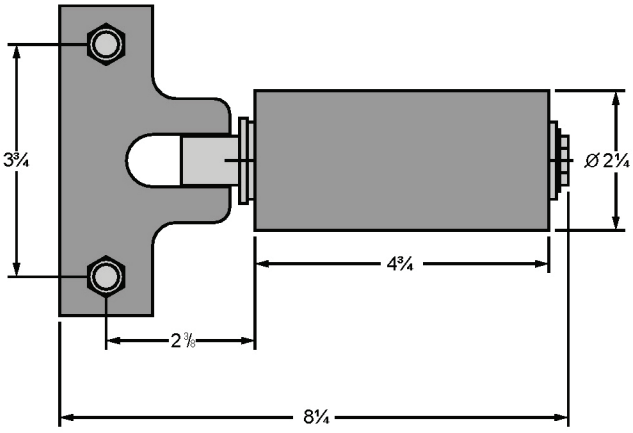

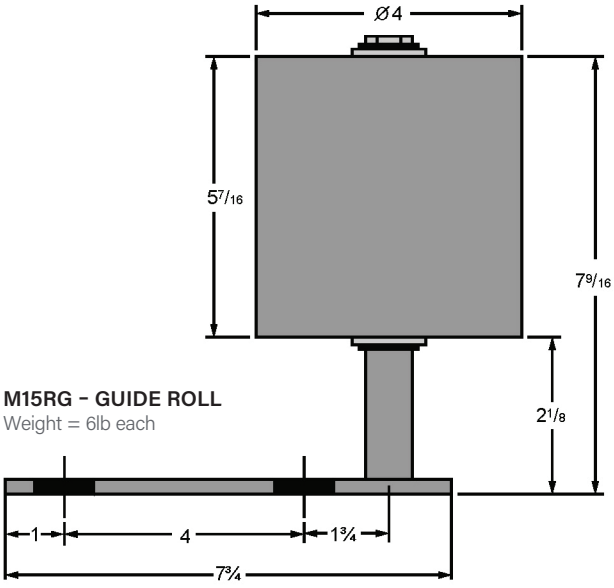

M15RG – GUIDE ROLL
Weight = 6lb each

Marco® impact idlers use the same frame as Marco® steel roll idlers. Impact idlers use a 5" diameter rubber disc roll instead of 4½" diameter steel roll. The center roll height for the Marco® rubber disc roller is 7½" compared to 7¼" for the Marco® steel roll idlers.

STANDARD, EQUAL & LONG CENTER ROLL

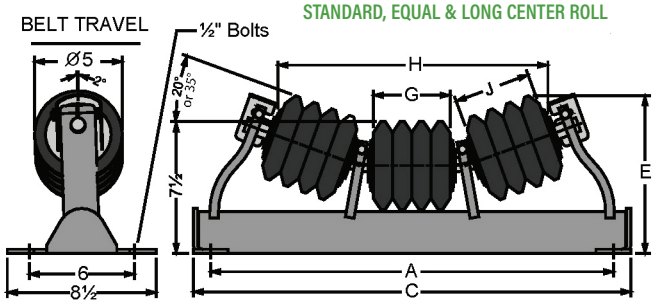

LOW-HEADROOM STYLE D

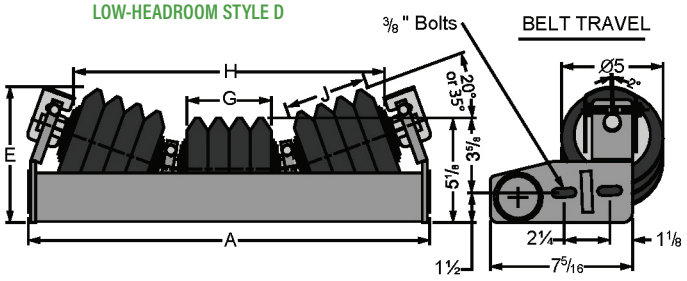

M15M IMPACT STANDARD 20º TROUGHER

PART NUMBER	BELT WIDTH	A	C	E	G	H	J	WEIGHT
M15M-14	14	23	25	9	5	14 7/8	5	33
M15M-16	16	25	27	9	6 1/2	16 5/8	5	36
M15M-18	18	27	29	9 1/2	6 1/2	19 1/4	6 1/2	39
M15M-20	20	29	31	9 1/2	8 1/2	21 1/4	6 1/2	42
M15M-24	24	33	35	10 1/4	8 1/2	25	8 1/2	49
M15M-30	30	39	41	10 7/8	10 1/2	30 3/4	10 1/2	58
M15M-36	36	45	47	11 5/8	12 1/2	36 1/2	12 1/2	67
M15M-42	42	51	53	11 5/8	18 1/2	42 1/2	12 1/2	76

M1534M IMPACT EQUAL 35º TROUGHER

PART NUMBER	BELT WIDTH	A	C	E	G	H	J	WEIGHT
M1534M-18	18	27	29	11 1/8	6 1/2	17 1/2	6 1/2	41
M1534M-20	20	29	31	11 1/8	8 1/2	19 1/2	6 1/2	44
M1534M-24	24	33	35	12 1/4	8 1/2	22 3/4	8 1/2	49
M1534M-30	30	39	41	13 3/8	10 1/2	28 1/4	10 1/2	59
M1534M-36	36	45	47	14 1/2	12 1/2	33 3/8	12 1/2	68
M1534M-42	42	51	53	15 5/8	14 1/2	38 1/2	14 1/2	77

M1535M IMPACT PICKING 35º TROUGHER (LONG CENTER ROLL)

PART NUMBER	BELT WIDTH	A	C	E	G	H	J	WEIGHT
M1535M-18	18	27	29	11 1/8	8 1/2	19 1/2	6 1/2	41
M1535M-20	20	29	31	11 1/8	10 1/2	21 1/2	6 1/2	44
M1535M-24	24	33	35	12 1/4	10 1/2	24 3/4	8 1/2	49
M1535M-30	30	39	41	13 3/8	16 1/2	30 3/4	8 1/2	59
M1535M-36	36	45	47	14 1/2	22 1/2	36 3/4	8 1/2	68
M1535M-42	42	51	53	15 5/8	24 1/2	42	10 1/2	77

MD15M IMPACT EQUAL 20º LOW-HEADROOM TROUGHER STYLE D

PART NUMBER	BELT WIDTH	A	E	G	H	J	WEIGHT
MD15M-14	14	19.75	6 5/8	5	14 3/4	5	24
MD15M-16	16	21.75	6 5/8	6 1/2	16 1/4	5	30
MD15M-18	18	23.75	7 1/8	6 1/2	19	6 1/2	33
MD15M-20	20	25.75	7 1/8	8 1/2	21 1/4	6 1/2	36
MD15M-24	24	29.75	7 7/8	8 1/2	25	8 1/2	40
MD15M-30	30	35.75	8 1/2	10 1/2	30 3/4	10 1/2	46
MD15M-36	36	41.75	9 1/8	12 1/2	36 1/2	12 1/2	52
MD15M-42	42	47.75	9 1/8	18 1/2	42 3/8	12 1/2	59

MD1534M IMPACT EQUAL 35º LOW-HEADROOM TROUGHER STYLE D

PART NUMBER	BELT WIDTH	A	E	G	H	J	WEIGHT
MD1534M-18	18	23.75	8 11/16	6 1/2	17 5/8	6 1/2	33
MD1534M-20	20	25.75	8 11/16	8 1/2	19 5/8	6 1/2	36
MD1534M-24	24	29.75	9 7/8	8 1/2	23	8 1/2	40
MD1534M-30	30	35.75	10 15/16	10 1/2	28 1/4	10 1/2	46
MD1534M-36	36	41.75	12 1/16	12 1/2	33 1/2	12 1/2	52
MD1534M-42	42	47.75	13 5/16	14 1/2	38 3/4	14 1/2	59

PRECISION PULLEY & IDLER – ALL RIGHTS RESERVED

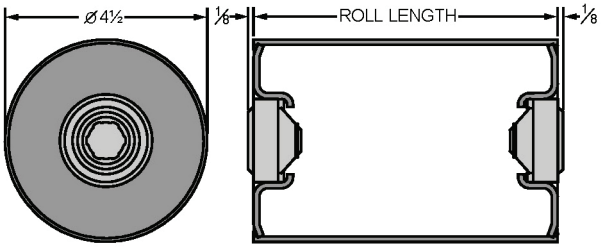

For CB504 replacement rolls to fit other frames, see our CB504 Roll flyer which can be downloaded from our website at www.ppi-global.com.

MARCO® ROLLS

PART NUMBER	ROLL LENGTH	WEIGHT
M3504-4.75	4 3/4	4.1
M3504-6.25	6 1/4	4.8
M3504-8.25	8 1/4	5.7
M3504-10.25	10 1/4	6.7
M3504-12.25	12 1/4	7.6
M3504-14.25	14 1/4	8.5
M3504-16.25	16 1/4	9.5
M3504-18.25	18 1/4	10.4
M3504-20.25	20 1/4	11.3
M3504-22.25	22 1/4	12.3
M3504-24.25	24 1/4	13.2
M3504-26.25	26 1/4	14.2
M3504-28.25	28 1/4	15.1
M3504-32.25	32 1/4	16.9
M3504-34.25	34 1/4	17.9
M3504-38.25	38 1/4	19.8
M3504-40.25	40 1/4	20.7
M3504-44.25	44 1/4	22.6
M3504-46.25	46 1/4	23.5

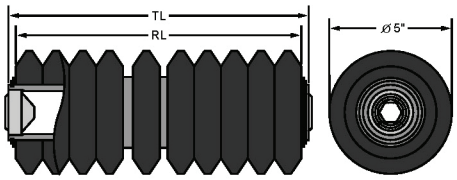

MARCO® IMPACT ROLLS

PART NUMBER	RL	TL	WEIGHT
M15M-106-5	4 3/16	4 3/4	4.4
M15M-106-6	5 11/16	6 1/4	5.7
M15M-106-8	7 11/16	8 1/4	7.7
M15M-106-10	9 11/16	10 1/4	9.8
M15M-106-12	11 11/16	12 1/4	11.2
M15M-106-14	13 11/16	14 1/4	13.2
M15M-106-16	15 11/16	16 1/4	15.3
M15M-106-18	17 11/16	18 1/4	17.4
M15M-106-20	19 11/16	20 1/4	18.8
M15M-106-22	21 11/16	22 1/4	20.8
M15M-106-24	23 11/16	24 1/4	22.9

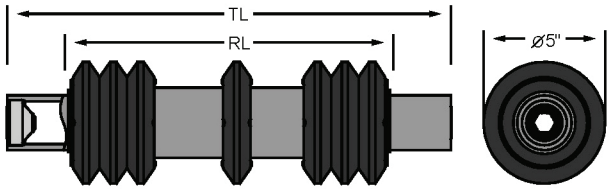

MARCO® RUBBER DISC RETURN ROLLS

PART NUMBER	RL	TL	WEIGHT
M15RM-106-18	13	18 1/4	14.5
M15RM-106-20	15	20 1/4	15.7
M15RM-106-22	17	22 1/4	16.8
M15RM-106-24	19	24 1/4	18.5
M15RM-106-28	24	28 1/4	20.8
M15RM-106-34	29	34 1/4	24.8
M15RM-106-40	35	40 1/4	28.7
M15RM-106-46	41	46 1/4	32.7

 PRECISION PULLEY & IDLER – ALL RIGHTS RESERVED

1½" MOUNTING BRACKET

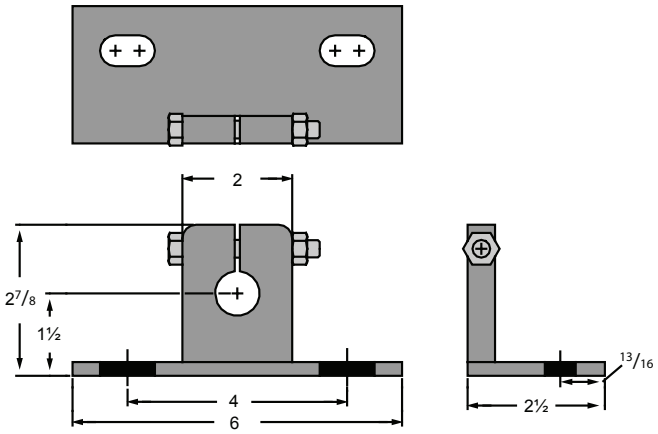

Part # M15R-101-1

Weight 1.7 lb

MARCO® END STUB SHAFT – TYPE 1

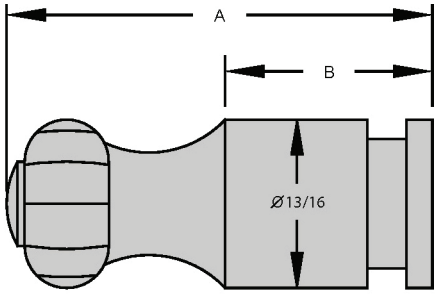

MARCO® CENTER STUB SHAFT – TYPE 2

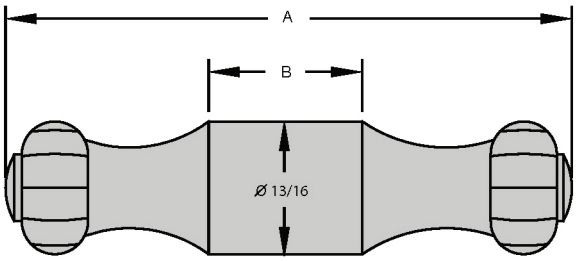

MARCO® STUB SHAFTS

PART NUMBER	DESCRIPTION	TYPE	A	B	WEIGHT
40451	End Stub Shaft	1	2 1/2	1 1/2	0.30
40456	15 Series	2	2 5/8	5/8	0.26
40458	1534 & 1535 Series	2	3	1	0.34

www.ppi-global.com | sales@ppi-global.com

Product shown are for illustrative purposes only and may display optional accessories or components. Please contact your sales representative for more information on product specifications.
PPI respectively reserves the right to make changes in engineering, design and specifications; add improvements; or discontinue manufacturing at any time without notice obligation.
PPI and its respective logo is a trademark of Precision, Inc. in the US and or other countries.

Copyright ©2019 Precision Pulley & Idler, all rights reserved.